Tape Saddle

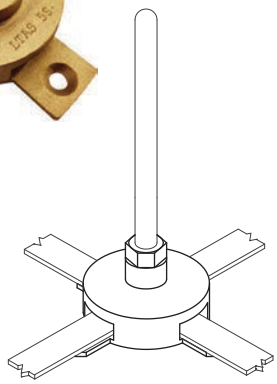

Code No.	Thread Size (in)	Tape Size (mm)	Material	Weight (kg)
LTAS 58	5/8	25x2 , 25x3 , 25x4	Copper Alloy	0.460
LTAS 34	3/4	25x2 , 25x3 , 25x4	Copper Alloy	0.440
LTAS 58T	5/8	25x2 , 25x3 , 25x4	Tinned Copper Alloy	0.460
LTAS 34T	3/4	25x2 , 25x3 , 25x4	Tinned Copper Alloy	0.440
LTAS 58A	5/8	25x3 , 25x4	Aluminium Alloy	0.134
LTAS 34A	3/4	25x3 , 25x4	Aluminium Alloy	0.132

Test Certificate
IEC 62561 Part 1

Material
Copper Alloy - BS EN 1982
Aluminium Alloy - BS 2898

Application
Support air terminal to connect with copper or aluminium tape conductors.

Round Saddle

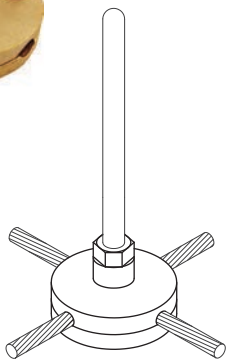

Code No.	Thread Size (in)	Cable Size (mm^2)	Material	Weight (kg)
LROS 58	5/8	50-70	Copper Alloy	0.60
LROS 34	3/4	50-70	Copper Alloy	0.60
LROS 58-C120	5/8	95-120	Copper Alloy	0.74
LROS 34-C120	3/4	95-120	Copper Alloy	0.74
LROS 58A	5/8	50-70	Aluminium Alloy	0.22
LROS 34A	3/4	50-70	Aluminium Alloy	0.21

Test Certificate
IEC 62561 Part 1

Material
Copper Alloy - BS EN 1982,
Bolt - Brass

Application
Support air terminal to connect with copper stranded or solid conductors.

Flat Saddle

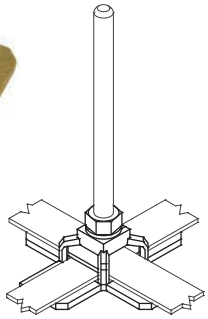

Code No.	Thread Size (in)	Maximum Conductor Width (mm)	Material	Weight (kg)
LFLS 58	5/8	31	Copper Alloy	0.49
LFLS 34	3/4	31	Copper Alloy	0.48
LFLS 58A	5/8	31	Aluminium Alloy	0.15
LFLS 34A	3/4	31	Aluminium Alloy	0.15

Test Certificate
IEC 62561 Part 1

Material
Copper Alloy - BS EN 1982
Aluminium Alloy - BS 2898

Application
Support air terminal to connect with copper tape conductors.

Ridge Saddle

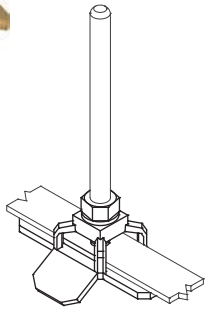

Code No.	Thread Size (in)	Maximum Conductor Width (mm)	Material	Weight (kg)
LRIS 58	5/8	31	Copper Alloy	0.60
LRIS 34	3/4	31	Copper Alloy	0.58
LRIS 58A	5/8	31	Aluminium Alloy	0.20
LRIS 34A	3/4	31	Aluminium Alloy	0.18

Test Certificate
IEC 62561 Part 1

Material
Copper Alloy - BS EN 1982
Aluminium Alloy - BS 2898

Application
Support air terminal to connect with copper tape conductors.

Double Base Saddle

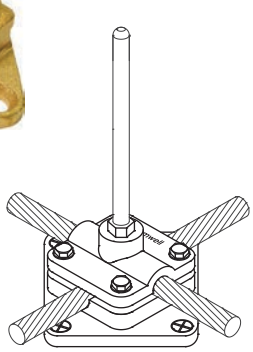

Code No.	Thread Size (in)	Cable Size (mm^2)	Material	Weight (kg)
LDOS 58	5/8	50-70	Copper Alloy	0.66
LDOS 34	3/4	50-70	Copper Alloy	0.66
LDOS 58C120	5/8	95-120	Copper Alloy	0.69
LDOS 34C120	3/4	95-120	Copper Alloy	0.69
LDOS 58A	5/8	50-70	Aluminium Alloy	0.20
LDOS 34A	3/4	50-70	Aluminium Alloy	0.19

Test Certificate
IEC 62561 Part 1

Material
Copper Alloy - BS EN 1982, Bolt - Brass
Aluminium Alloy - BS 2898,
Bolt - Stainless Steel

Application
Support air terminal to connect with copper stranded or solid conductors.

Cross Cable Saddle

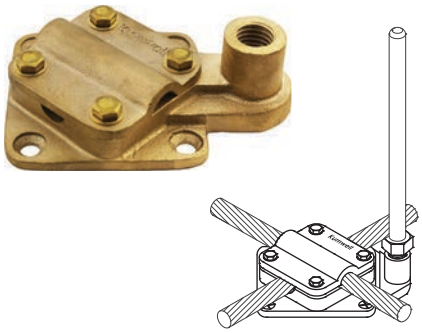

Code No.	Thread Size (in)	Cable Size (mm^2)	Material	Weight (kg)
LCRS 58	5/8	35-70	Copper Alloy	0.95
LCRS 34	3/4	35-70	Copper Alloy	0.95

Test Certificate
IEC 62561 Part 1

Material
Copper Alloy - BS EN 1982
Bolt - Brass

Application
Support air terminal to connect with copper stranded or solid conductors.

Adjustable Saddle

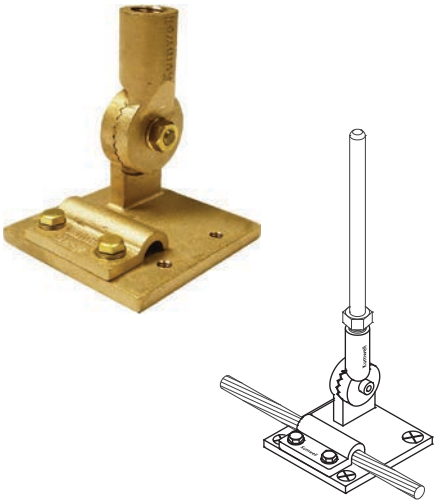

For Cable

Code No.	Thread Size (in)	Cable Size (mm^2)	Material	Weight (kg)
LDAS 58	5/8	50-70	Copper Alloy	0.72
LDAS 34	3/4	50-70	Copper Alloy	0.72
LDAS 58-C120	5/8	95-120	Copper Alloy	0.73
LDAS 34-C120	3/4	95-120	Copper Alloy	0.73
LDAS 58T	5/8	50-70	Tinned Copper Alloy	0.72
LDAS 34T	3/4	50-70	Tinned Copper Alloy	0.72
LDAS 58A	5/8	50-70	Aluminium Alloy	0.25
LDAS 34A	3/4	50-70	Aluminium Alloy	0.25

Test Certificate
IEC 62561 Part 1

Material
Copper Alloy - BS EN 1982, Bolt - Brass
Tinned Copper Alloy, Bolt - Stainless Steel
Aluminium Alloy-BS 2898

Application
Support air terminal onto adjustable angle to connect with copper stranded.

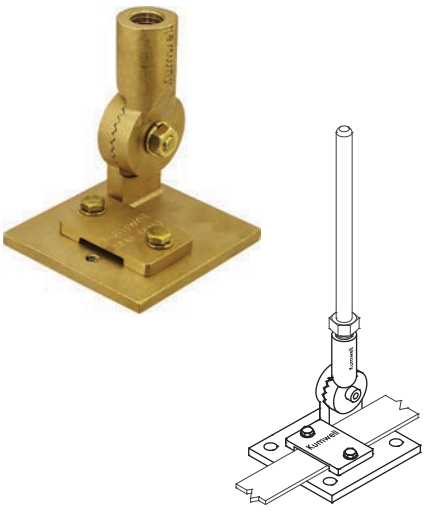

For Tape

Code No.	Thread Size (in)	Tape Size (mm)	Material	Weight (kg)
LDAS 58-252	5/8	25x2	Copper Alloy	0.81
LDAS 58-253	5/8	25x3	Copper Alloy	0.81
LDAS 34-253	3/4	25x3	Copper Alloy	0.81
LDAS 58-254	5/8	25x4	Copper Alloy	0.81
LDAS 34-254	3/4	25x4	Copper Alloy	0.81
LDAS 58-253T	5/8	25x3	Tinned Copper Alloy	0.81
LDAS 34-253T	3/4	25x3	Tinned Copper Alloy	0.81
LDAS 58-253A	5/8	25x3	Aluminium Alloy	0.25
LDAS 34-253A	3/4	25x3	Aluminium Alloy	0.25
LDAS 58-254A	5/8	25x4	Aluminium Alloy	0.25
LDAS 34-254A	3/4	25x4	Aluminium Alloy	0.25

Test Certificate
IEC 62561 Part 1

Material
Copper Alloy - BS EN 1982, Bolt - Brass
Tinned Copper Alloy, Bolt - Stainless Steel
Aluminium Alloy-BS 2898

Application
Support air terminal onto adjustable angle toconnect with copper or aluminium tape conductors.

Floor Saddle

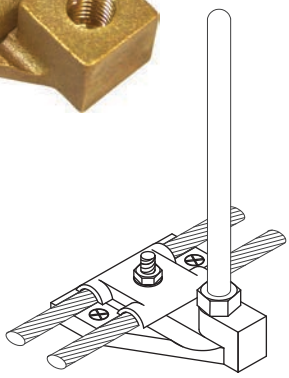

Code No.	Thread Size (in)	Cable Size (mm^2)	Material	Weight (kg)
LFRS 58	5/8	50-70	Copper Alloy	0.58
LFRS 34	3/4	50-70	Copper Alloy	0.58
LFRS 58C-95	5/8	95	Copper Alloy	0.54
LFRS 34C-95	3/4	95	Copper Alloy	0.54
LFRS 58A	5/8	50-70	Aluminium Alloy	0.23
LFRS 34A	3/4	50-70	Aluminium Alloy	0.23

Test Certificate
IEC 62561 Part 1

Material
Copper Alloy - BS EN 1982
Bolt Nut - Brass
Aluminium Alloy-BS 2898

Application
Support air terminal to connect with copper stranded or solid conductors.

Wall Saddle

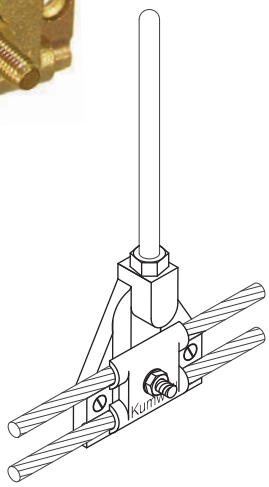

Code No.	Thread Size (in)	Cable Size (mm^2)	Material	Weight (kg)
LWAS 58	5/8	25-70	Copper Alloy	0.58
LWAS 34	3/4	25-70	Copper Alloy	0.58
LWAS 58C-95	5/8	95	Copper Alloy	0.54
LWAS 34C-95	3/4	95	Copper Alloy	0.54
LWAS 58A	5/8	25-70	Aluminium Alloy	0.23
LWAS 34A	3/4	25-70	Aluminium Alloy	0.23

Test Certificate
IEC 62561 Part 1

Material
Copper Alloy - BS EN 1982
Bolt Nut - Brass
Aluminium Alloy-BS 2898

Application
Support air terminal to connect with copper stranded or solid conductors.

Cable Support

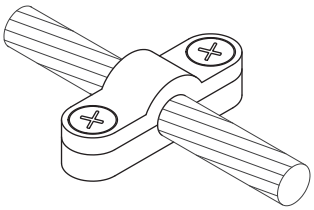

Code No.	Cable Size (mm^2)	Material	Weight (kg)
LCAS 25-35	25-35	Copper Alloy	0.06
LCAS 50-70	50-70	Copper Alloy	0.06
LCAS 95-120	95-120	Copper Alloy	0.08
LCAS 150-185	150-185	Copper Alloy	0.10
LCAS 240-300	240-300	Copper Alloy	0.17
LCAS 25-35T	25-35	Tinned Copper Alloy	0.06
LCAS 50-70T	50-70	Tinned Copper Alloy	0.06
LCAS 95-120T	95-120	Tinned Copper Alloy	0.08
LCAS 25-35A	25-35	Aluminium Alloy	0.02
LCAS 50-70A	50-70	Aluminium Alloy	0.02
LCAS 95-120A	95-120	Aluminium Alloy	0.03
LCASD-8-10A	Aluminium Ø 8-10 mm	Aluminium Alloy	0.03

Test Certificate
IEC 62561 Part 4

Material
Copper Alloy - BS EN 1982, Bolt - Brass
Tinned Copper Alloy, Bolt - Stainless Steel
Aluminium Alloy - BS 2898,
Bolt - Stainless Steel

Application
Fix copper stranded or solid conductors.

Cable Cross Clamp

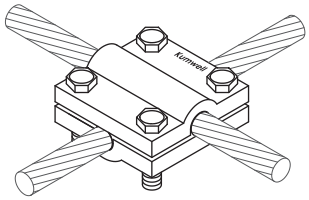

Code No.	Cable Size (mm^2)	Material	Weight (kg)
LCAC 35-70	70	Copper Alloy	0.32
LCAC 95-120	95-120	Copper Alloy	0.34
LCAC 150-240	150-240	Copper Alloy	0.62
LCAC 35-70A	70	Aluminium Alloy	0.10
LCAC 95-120A	95-120	Aluminium Alloy	0.16

Test Certificate
IEC 62561 Part 1

Material
Copper Alloy - BS EN 1982, Bolt - Brass
Aluminium Alloy - BS 2898,
Bolt - Stainless Steel

Application
Connect copper stranded or solid conductors.

Cable Test Connector

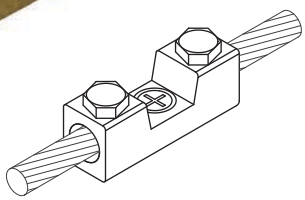

Code No.	Cable Size (mm^2)	Material	Weight (kg)
LCATT 35-120	35-120	Copper Alloy	0.192
LCATT 35-120T	35-120	Tinned Copper Alloy	0.192
LCATT 35-120A	35-120	Aluminium Alloy	0.058

Test Certificate
IEC 62561 Part 1

Material
Tinned Copper Alloy, Bolt - Stainless Steel
Aluminium Alloy - BS 2898,
Bolt - Stainless Steel

Application
Connect copper stranded or solid conductors.

Cable to Tape

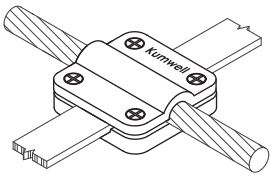

Code No.	Cable Size (mm^2)	Tape Size (mm)	Material	Weight (kg)
LCTT 70-252	35-70	25x2	Copper Alloy	0.264
LCTT 120-252	95-120	25x2	Copper Alloy	0.266
LCTT 70-253	35-70	25x3	Copper Alloy	0.264
LCTT 120-253	95-120	25x3	Copper Alloy	0.266
LCTT 70-254	35-70	25x4	Copper Alloy	0.276
LCTT 120-254	95-120	25x4	Copper Alloy	0.292
LCTT 70-256	35-70	25x6	Copper Alloy	0.303
LCTT 120-256	95-120	25x6	Copper Alloy	0.319
LCTT 70-253A	35-70	25x3	Aluminium Alloy	0.090
LCTT 70-254A	35-70	25x4	Aluminium Alloy	0.110

Test Certificate
IEC 62561 Part 1

Material
Copper Alloy - BS EN 1982, Bolt - Brass
Aluminium Alloy - BS 2898, (A)

Application
Connect copper tape conductors with copper stranded or solid conductors.

One Hole Cable Grip

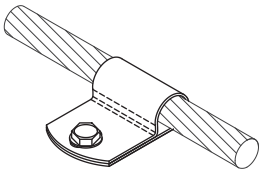

Code No.	Cable Size (mm^2)	Material	Weight/100 (kg)
LOCG 25-35	25-35	Copper	1.2
LOCG 50-70	50-70	Copper	1.4
LOCG 95-120	95-120	Copper	2.5
LOCG 150-185	150-185	Copper	2.9
LOCG 240-300	240-300	Copper	9.0

Test Certificate
IEC 62561 Part 4

Material
Copper - BS EN 13601

Application
Fix copper stranded or solid conductors.

Tee Clamp

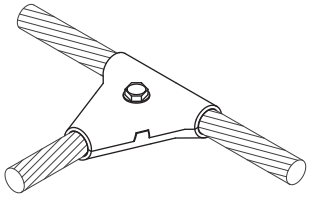

Code No.	Cable Size (mm^2)	Material	Weight (kg)
LTEC-A	50-70	Copper Alloy	0.146
LTEC-B	95-120	Copper Alloy	0.287
LTEC-AT	50-70	Tinned Copper Alloy	0.146
LTEC-BT	95-120	Tinned Copper Alloy	0.287

Test Certificate
IEC 62561 Part 1

Material
Copper Alloy - BS EN 1982, Bolt - Brass
Tinned Copper Alloy, Bolt - Stainless Steel

Application
Connect copper stranded or solid conductors.

Tape Support

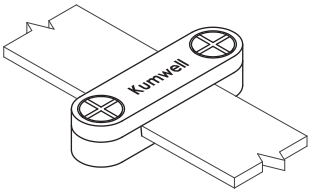

Code No.	Tape Size (mm)	Material	Weight (kg)
LTAS-252	25x2	Copper Alloy	0.067
LTAS-253	25x3	Copper Alloy	0.067
LTAS-254	25x4	Copper Alloy	0.071
LTAS-256	25x6	Copper Alloy	0.076
LTAS-304	30x4	Copper Alloy	0.087
LTAS-305	30x5	Copper Alloy	0.090
LTAS-324	32x4	Copper Alloy	0.094
LTAS-325	32x5	Copper Alloy	0.098
LTAS-326	32x6	Copper Alloy	0.101
LTAS-403	40x3	Copper Alloy	0.112
LTAS-404	40x4	Copper Alloy	0.116
LTAS-405	40x5	Copper Alloy	0.121
LTAS-503	50x3	Copper Alloy	0.117
LTAS-506	50x6	Copper Alloy	0.127
LTAS-253T	25x3	Tinned Copper Alloy	0.067
LTAS-254T	25x4	Tinned Copper Alloy	0.071
LTAS-256T	25x6	Tinned Copper Alloy	0.076
LTAS-253A	25x3	Aluminium Alloy	0.021
LTAS-254A	25x4	Aluminium Alloy	0.027
LTAS-256A	25x6	Aluminium Alloy	0.029

Test Certificate
IEC 62561 Part 4

Material
Copper Alloy - BS EN 1982, Bolt - Brass
Tinned Copper Alloy, Bolt - Stainless Steel
Aluminium Alloy - BS 2898, (A)
Bolt - Stainless Steel

Application
Fix copper or aluminium tape conductors

Square Tape Support

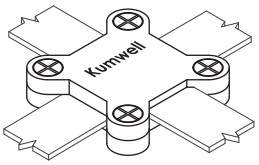

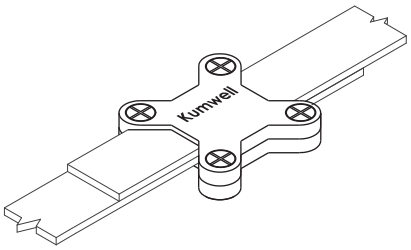

Code No.	Tape Size (mm)	Material	Weight (kg)
LSQS-252	25x2	Copper Alloy	0.150
LSQS-253	25x3	Copper Alloy	0.150
LSQS-254	25x4	Copper Alloy	0.172
LSQS-256	25x6	Copper Alloy	0.216
LSQS-304	30x4	Copper Alloy	0.261
LSQS-305	30x5	Copper Alloy	0.295
LSQS-324	32x4	Copper Alloy	0.245
LSQS-325	32x5	Copper Alloy	0.276
LSQS-403	40x3	Copper Alloy	0.341
LSQS-404	40x4	Copper Alloy	0.381
LSQS-405	40x5	Copper Alloy	0.423
LSQS-503	50x3	Copper Alloy	0.412
LSQS-506	50x6	Copper Alloy	0.561
LSQS-253T	25x3	Tinned Copper Alloy	0.150
LSQS-254T	25x4	Tinned Copper Alloy	0.172
LSQS-256T	25x6	Tinned Copper Alloy	0.216
LSQS-253A	25x3	Aluminium Alloy	0.045
LSQS-254A	25x4	Aluminium Alloy	0.052
LSQS-256A	25x6	Aluminium Alloy	0.065

Test Certificate
IEC 62561 Part 1

Material
Copper Alloy - BS EN 1982, Bolt - Brass
Tinned Copper Alloy, Bolt - Stainless Steel
Aluminium Alloy - BS 2898, (A)
Bolt - Stainless Steel

Application
Connect copper or aluminium tape conductors.

Cable-Tape Test Connector

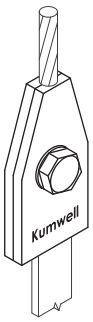

Code No.	Conductor Size (mm)	Tape Size (mm)	Weight (kg)
LPCTTC-C	8	25x3	0.31

Code No.	Conductor Size (Sq mm^2)	Tape Size (mm)	Weight (kg)
LPCTTC-70252	70	25x2	0.31
LPCTTC-70253	70	25x3	0.31
LPCTTC-70253A	70	25x3	0.085
LPCTTC-95252	95	25x2	0.37
LPCTTC-95253	95	25x3	0.37
LPCTTC-120252	120	25x2	0.37
LPCTTC-120253	120	25x3	0.37

Test Certificate
IEC 62561 Part 1

Material
Copper Alloy - BS EN 1982, Bolt - Brass

Application
Connect copper stranded or solid with copper tape conductors.

Tape Test Connector

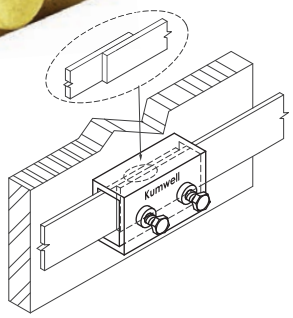

Code No.	Maximum Tape Size (mm)	Material	Weight (kg)
LTCT 256	26x8	Copper Alloy	0.236
LTCT 256T	26x8	Copper Alloy	0.236
LTCT 506	51x8	Copper Alloy	0.425
LTCT 256A	26x8	Aluminium Alloy	0.072
LTCT 506A	51x8	Aluminium Alloy	0.128

Test Certificate
IEC 62561 Part 1

Material
Copper Alloy - BS EN 1982, Bolt - Brass
Aluminium Alloy - BS 2898,
Bolt - Stainless Steel

Application
Connect copper or aluminium tape conductors.

Tape Clip

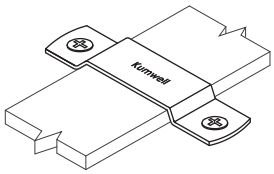

Code No.	Tape Size (mm)	Weight/100 (kg)
LPTC-203	20x3	1.25
LPTC-252	25x2	1.34
LPTC-253	25x3	1.34
LPTC-254	25x4	1.38
LPTC-256	25x6	1.40
LPTC-303	30x3	1.35
LPTC-304	30x4	1.57
LPTC-306	30x6	1.60
LPTC-506	50x6	3.55

Test Certificate
IEC 62561 Part 4

Material
Copper - BS EN 13601

Application
Fix copper tape conductor on flat surface.

Bi-Metallic Connector

LBMC

Connector

Code No.	Connection Length (mm)	Material	Weight (kg)
LBMC	80	Copper / Aluminium	0.18

Test Certificate
IEC 62561 Part 1

LBMW

Washer

Code No.	Dimension (mm)	Hole Size (mm)	Weight/100 (kg)
LBMW-6	30x2	7	0.46
LBMW-8	30x2	9	0.45
LBMW-10	30x2	11	0.45
LBMW-12	30x2	14	0.44
LBMW-16	30x2	18	0.44

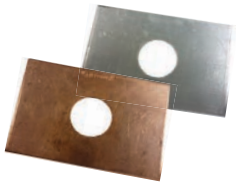

LBMP

Plate

Code No.	Dimension (mm)	Hole Size (mm)	Weight/100 (kg)
LBMP-6	55x36x2	7	0.68
LBMP-8	55x36x2	9	0.68
LBMP-10	55x36x2	11	0.68
LBMP-12	55x36x2	14	0.68
LBMP-16	55x36x2	18	0.68

Material
Copper Alloy - BS EN 1982
Aluminium - BS 2898

Application
Connect copper and aluminium conductors by non-corrosive contact which is made by fusion method

Back Plate Holdfast

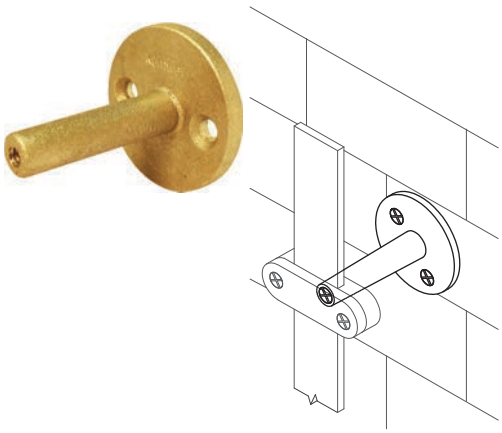

Code No.	Diameter (Ø) (mm)	Material	Weight (kg)
LXPH-C	63	Copper Alloy	0.26
LXPH-A	68	Aluminium Alloy	0.08

Test Certificate
IEC 62561 Part 4

Copper Alloy - BS EN 1982
Aluminium - BS 2898

Application
Place copper stranded, solid or tape conductors onto flat surface.

Back Holdfast

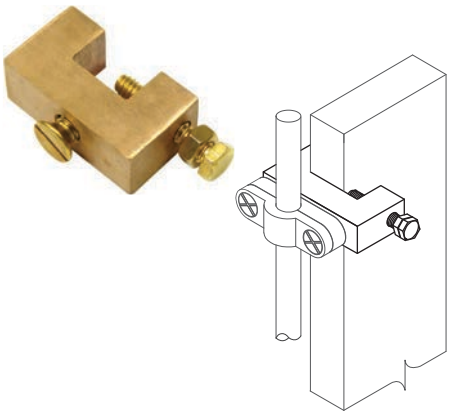

Code No.	Steel Plate Thickness (mm)	Material	Weight (kg)
LXGBH-12	1-13	Copper Alloy	0.083
LXGBH-12A	1-13	Aluminium Alloy	0.032

Test Certificate
IEC 62561 Part 4

Material
Copper Alloy - BS EN 1982,
Bolt - Brass
Aluminium Alloy - BS 2898,
Bolt - Stainless Steel

Application
Support conductor onto angle Steel.

Screw Down Test Clamp

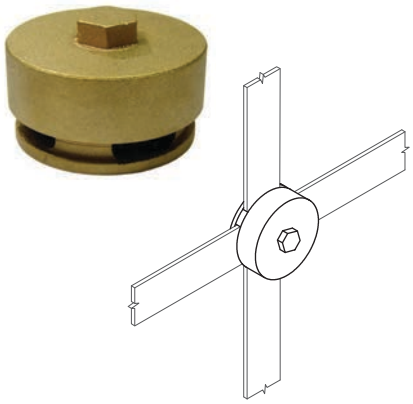

Code No.	Tape Size (mm)	Material	Weight (kg)
LXSTC-252	25x2	Copper Alloy	0.48
LXSTC-253	25x3	Copper Alloy	0.48
LXSTC-253A	25x3	Aluminium Alloy	0.15

Test Certificate
IEC 62561 Part 1

Material
Copper Alloy - BS EN 1982,
Aluminium Alloy - BS EN 2898

Application
Connect tape conductors in 4-way crossing connection.

Beam Clamp

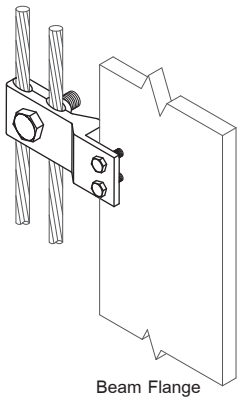

Code No.	Cable Size (mm^2)	Material	Weight (kg)
LBC-35-120	35-120	Copper Alloy	0.51
LBC-35-120A	35-120	Aluminium Alloy	0.15

Test Certificate
IEC 62561 Part 1

Material
Copper Alloy - BS EN 1982
Bolt - Brass
Aluminium Alloy - BS 2898,
Bolt - Stainless Steel

Application
Connect stranded copper or solid copper conductor onto tower structure, H-beam structure or steel structure.

Conductor to Rebar Clamp

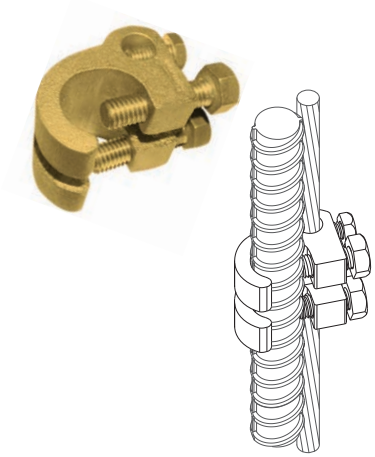

Code No.	Cable Size (mm^2)	Rebar Size (mm)	Weight (kg)
LRBC 18-70	10-70	8-18	0.32

Test Certificate
IEC 62561 Part 1

Material
Copper Alloy - BS EN 1982
Bolt - Brass

Application
Hold stranded copper or solid copper conductors to rebar.

Terminal Lug

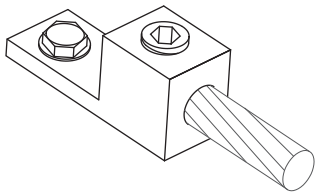

Code No.	Cable Size (mm^2)	Stud Size (in)	Weight (kg)
LXTEL 35	6-35	3/16	0.10
LXTEL 70	50-70	5/16	0.15
LXTEL 120	95-120	5/16	0.24
LXTEL 185	150-185	1/2	0.35
LXTEL 300	240-300	1/2	0.60
LXTEL 500	400-500	1/2	0.80

Test Certificate
IEC 62561 Part 1

Material
Copper Alloy - BS EN 1982,
Bolt - Silicon Bronze

Application
Connect copper stranded or solid conductors to flat bar.

Split Bolt

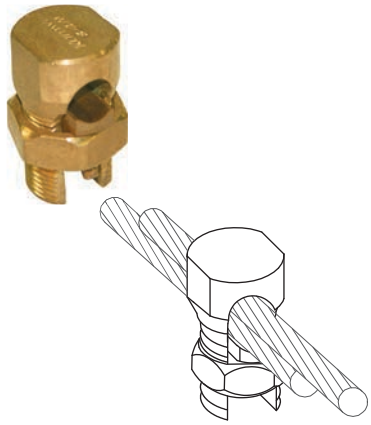

Code No.	Cable Size (mm^2) Run	Cable Size (mm^2) Tap	Weight (kg)
S-2/0	2/0 AWG	2/0 AWG	0.10
LXSB 70	70	70	0.10

Test Certificate
IEC 62561 Part 1

Material
Copper Alloy - BS EN 1982

Application
Suitable for joint copper conductors (above ground).

Universal Connector

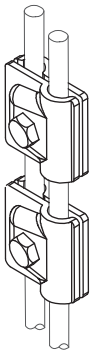

Universal Connector is made of Stainless Steel. There are two types of connecting process cross joint and parallel joint. The contact resistance shall be less than 1 mΩ, as well as the connected conductors tensile force s hall be more than 900 N

Code No.	Cable Size (mm)	Torque (N•m)	Bolt Size (mm)	Weight (kg)
LCAC-SS-10-M10	8-10	26	M10 (1.50x35)	0.11

Test Certificate
IEC 62561 Part 1

Material
Stainless Steel 304

Shear Bolt Connector

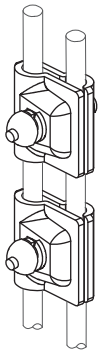

Shear Bolt Connector provide connection for cross joint or parallel joint.
Easy installation, no torque wrench required.

Code No.	Cable Size (mm)	Torque (N•m)	Bolt Size (mm)	Weight (kg)
LCAC-SS-10-M10-N	8-10	26	M10 (1.50x35)	0.11

Test Certificate
IEC 62561 Part 1

Material
Stainless Steel - 304

Rebar Clamp Connector with Shear Bolt

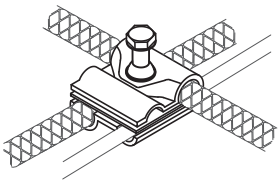

The universal clamp connector for connection type T-joint, cross joint and parallel join between rebar to rebar, rebar to round conductor, round conductor to round conductor. The shear bolt provide quick installation and the superior of connection.

Code No.	Rebar Size (mm)	Conductor Size (mm)
GCRER-SB-25-10	16 - 25	8 - 10
GCRER-SB-25-20	16 - 25	14 - 20
GCRER-SB-40-10	32 - 40	8 - 10
GCRER-SB-40-20	32 - 40	14 - 20

Test Certificate
IEC 62561 Part 1

Material
Zinced Steel

Q-Connector

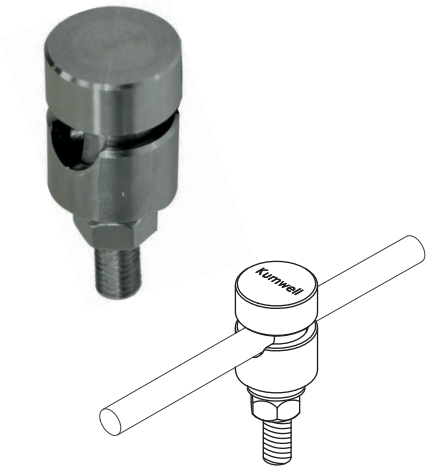

Code No.	Conductor (Ø) (mm)	Weight (kg)
GXCCSS 8	8	0.068
GXCCSS 10	10	0.068

Test Certificate
IEC 62561 Part 4

Material
Stainless Steel 304

Application
Fix Gavanized /Stanless Steel round

Z-Connector

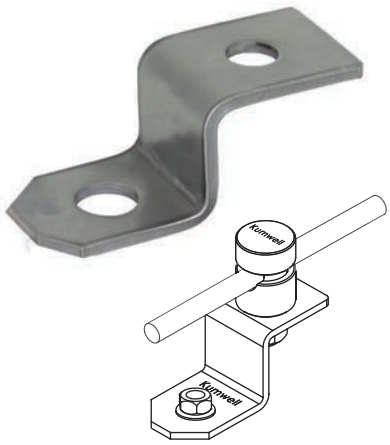

Galvanized Steel

Code No.	Hold Size (mm)	Weight (kg)
TSSS 7030-1H	11	0.054

Test Certificate
IEC 62561 Part 1

Material
Stainless Steel 304

Application
Connect Q-Connector to Earth Point.

Tape Support

Code No.	Tape Size (mm)	Weight (kg/m)
LTSSS-303.5	20x3 to 30x3.5	0.112

Test Certificate
IEC 62561 Part 4

Material
Stainless Steel 304

Application
Fix Gavanized /Stanless Steel round

Tape Lug Connector

Tape Lug Connector is use for connecting Tape conductor to earth point or earth termination without drilling.

Code No.	Tape Size (mm)	Weight (kg/m)
LTSSC-303.5	20x3 to 30x3.5	0.140

Test Certificate
IEC 62561 Part 1

Material
Stainless Steel 304

Square Tape Clamp

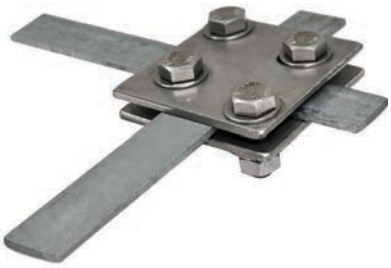

Code No.	Tape Conductor (mm)	Torque (N•m)	Weight (kg/m)
LCACSS-T303.5	20x3 to 30x3.5	14	0.242
LCACSS-T406	30x3.5 to 40x6	14	0.312

Test Certificate
IEC 62561 Part 1

Material
Stainless Steel 304

Application
Connect Gavanized /
Stanless Steel tape conductor

Round and Tape Connector

Code No.	Tape Conductor (mm)	Circutar Conductor (Ø) (mm)	Weight (kg)
LCACSS-W10-T303.5	20x3 to 30x3.5	8-10	0.236
LCACSS-W10-T406	30x3.5 to 40x4	8-10	0.306

Test Certificate
IEC 62561 Part 1

Material
Stainless Steel 304

Application
Connect Gavanized /Stanless Steel tape
to round conductor

Circular Conductors Holders

Code No.	Conductor Size (mm)	Dimension (mm) W	L	H	Weight/100 (kg)
LSCH-8	8	20	22	22	1.8

Material
Stainless steel 304

Application
Hold Circular conductors to wall or floor and install above metal sheet clamp for GI Roof.

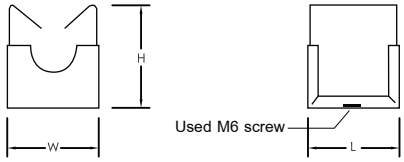

Non Metallic DC Clips

Code No.	Tape Size (mm)	Dimension (mm) W	L	H	Weight (kg)
LNDCP 252	25x2	20	37	14	0.6
LNDCP 253	25x3	20	37	14	0.6
LNDCP 254	25x4	20	37	14	0.6
LNDCP 256	25x6	20	37	14	0.6
LNDCP 253PVC	25x3 with PVC	20	37	14	0.6

Material
High grade and UV stabilized polypropylene (PP)

Application
Hold tape conductors on PVC or metal flat surface

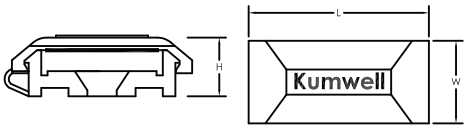

Note : Special color can be requested.

Adhesive Base

Code No.	Base Diameter (Ø) (mm)	Weight (kg)
LADSB	63	2.2

Material
High grade and UV stabilized polypropylene (PP)

Application
Support tape clip by adhere to PVC or metal flat surface with recommended heavy duty gule

Note : Special color can be requested.

Tape Clip with Adhesive Base

Code No.	Tape Size (mm)	Base Diameter (Ø) (mm)	Weight/100 (kg)
LTCS 252	25x2	63	2.50
LTCS 253	25x3	63	2.50
LTCS 254	25x4	63	2.50
LTCS 256	25x6	63	2.50
LTCS 253 PVC	25x3 with PVC	63	2.50

Material
High grade and UV stabilized polypropylene (PP)
Bolt - Stainless Steel

Application
Hold conductors on Metallic or Plastic roof

Note : Special color can be requested.

Pyramid Holdfast

Code No.	Tape Size (mm)	Base Diameter (Ø) WxL (mm)	Weight/100 (kg)
LTPH 252	25x2	120x120	1.12
LTPH 253	25x3	120x120	1.12
LTPH 254	25x4	120x120	1.15
LTPH 256	25x6	120x120	1.18
LTPH 253 PVC	25x3 with PVC	120x120	1.16

Material
High grade and UV stabilized polypropylene (PP)
Filled-in-Concrete.
Bolt - Stainless Steel

Application
Hold tape conductors on PVC or metal flat surfacewith recommended heavy duty glue

Note : Special color can be requested.

Insulator Support

Code No.	Color	Weight/100 (kg)
LISUV-3-25B	Black	2.50
LISUV-3-25W	White	2.50

Material
High grade and UV stabilized Nylon 6

Application
Support equipment as an insulator

Note : Special color can be requested.

Accessories Adhesive

LADHS

LPRM

Code No.	Material	Standard Pack (g)	Weight (kg)
LADHS	Ethly Cyanoacrylate	20	0.02
LPRM	Aliphatic Amine	50	0.05

Application
Adhesive is suitable for adhesion between the adhesive base and Metallic or Plastic roof. Primer is special product for cleaning the adhesive base and material's surface before adhesion.

Usage
15 pieces and Primer for 50 pieces of Adhesive base

Solvent Cleaning

Code No.	Volume (ml)	Weight (kg)
ALSC	800	0.70

Application
Clean conductor and clamp before connection

Copper Lug for Exothermic Welding

1-Hole

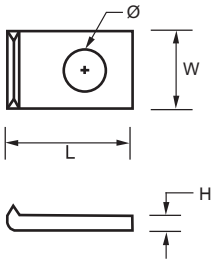

Code No.	Cable Size (mm^2)	Dimensions (mm) W	L	H	Ø
CL-1-25	25	25.4	40	3.2	14.2
CL-1-35	35	25.4	40	3.2	14.2
CL-1-50	50	25.4	40	3.2	14.2
CL-1-70	70	25.4	40	3.2	14.2
CL-1-95	95	25.4	40	4.8	14.2
CL-1-120	120	25.4	40	4.8	14.2
CL-1-150	150	25.4	40	6.3	14.2
CL-1-185	185	25.4	40	6.3	14.2
CL-1-240	240	38.2	40	6.3	14.2

Test Certificate
IEC 62561 Part 1

Material
Tin Plated Copper - BS EN 13601

Application
Connect copper stranded or solid conductors by exothermic welding

2-Hole

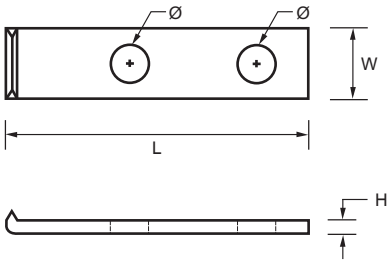

Code No.	Cable Size (mm^2)	Dimensions (mm) W	L	H	Ø
CL-2-25	25	25.4	85	3.2	14.2
CL-2-35	35	25.4	85	3.2	14.2
CL-2-50	50	25.4	85	3.2	14.2
CL-2-70	70	25.4	85	3.2	14.2
CL-2-95	95	25.4	85	4.8	14.2
CL-2-120	120	25.4	85	4.8	14.2
CL-2-150	150	25.4	85	6.3	14.2
CL-2-185	185	25.4	85	6.3	14.2
CL-2-240	240	38.2	85	6.3	14.2

Test Certificate
IEC 62561 Part 1

Material
Tin Plated Copper - BS EN 13601

Application
Connect copper stranded or solid conductors by exothermic welding.

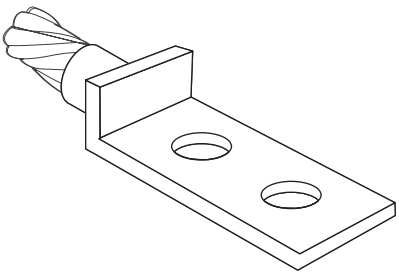

Exothermic Welding with (Lug)CB1

Lightning Pole

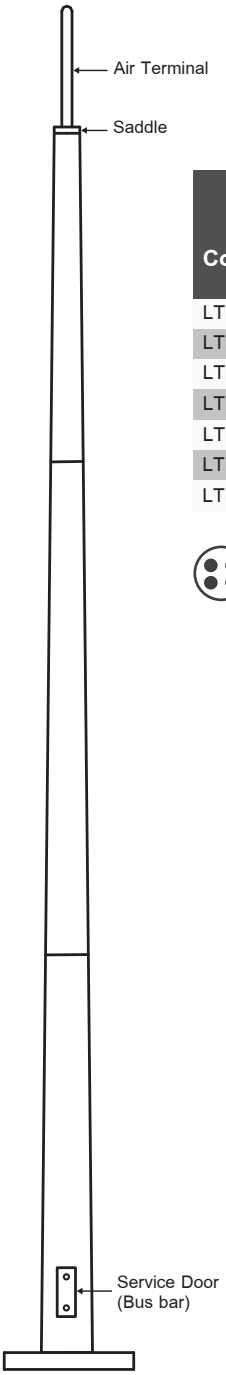

Code No.	Dimensions (mm)											O.D. Ø(mm)	Flange Base Dimensions (mm)			Approx. Weight (kg)
	Figure	LO (mm)	High	L	L1	L2	L3	L4	OV.1	OV.2	OV.3		Figure	Ø Hole (mm)	D (mm)	
LTLP-3000	1	2400	3000	600	2400	-	-	-	-	-	-	60	5	25	160	26.92
LTLP-6000	1	5400	6000	600	5400	-	-	-	-	-	-	60	5	32	250	78.88
LTLP-9000	2	8400	9000	600	5400	3200	-	-	200	-	-	60	5	32	250	132.74
LTLP-12000	3	11300	12000	600	5400	3200	3240	-	300	240	-	76	5	32	300	227.45
LTLP-15000	3	14400	15000	600	5400	4880	4780	-	380	280	-	76	5	32	350	311.05
LTLP-18000	4	17400	18000	600	5400	4880	4780	3550	530	400	280	114	6	32	450	461.26
LTLP-20000	4	19400	20000	600	5400	5600	5500	4400	600	500	400	140	7	32	550	664.11

Material
Air - Terminal, Busbar - Solid Copper - BS EN 13601
Saddle - Copper Alloy - BS EN 1982
Pole - Hot Dip Galvanized Steel ASTM A123
Down conductor - 50 sq mm IEC 01

Application
Suitable for any areas or projects where air terminal is unable to install and maunt on the roof such as oil / gas tank, solar farm etc.
Max wind load with stand 120 km/h.

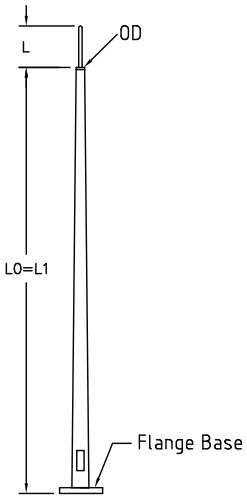

Fig.1

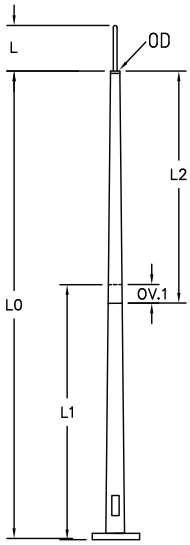

Fig.2

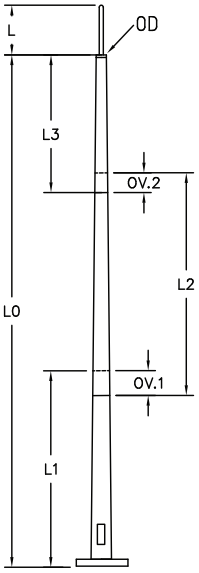

Fig.3

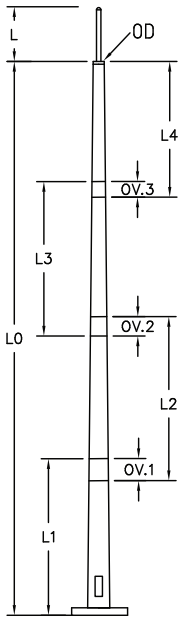

Fig.4

Flange Base Detail →

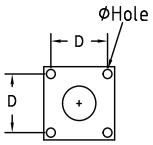

Fig.5

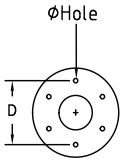

Fig.6

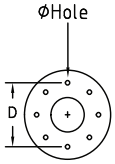

Fig.7

Self - Standing Lightning Pole (Hot Dip Galvanized)

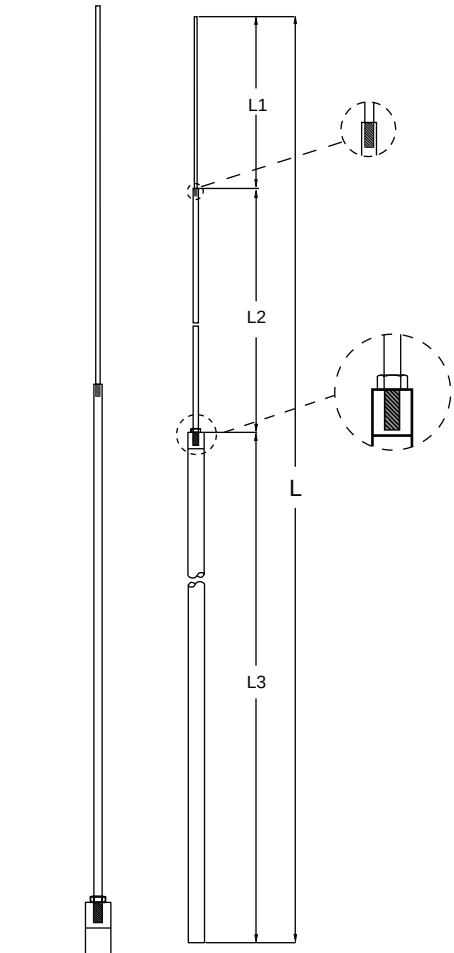

Pole

Code No.	L - Hight (mm)	Dimension (mm) L1	L2	L3	Weight (kg)
LTSP - 3000	3000	1000	1000	1000	3.29
LTSP - 4500	4500	1000	1500	2000	5.58
LTSP - 6000	6000	1000	2000	3000	7.87

Test Certificate
IEC 62561 Part 2 (Air Terminal)

Material
L1 : Air rod - Aluminium Dia. 10 mm.
L2 : Stainless Round bar SUS 304 Dia. 16 mm.
L3 : Stainless steel pipe SUS 304 Dia. 42 mm.

Application
Suitable for lightning protection,
Chose select foundation type below.

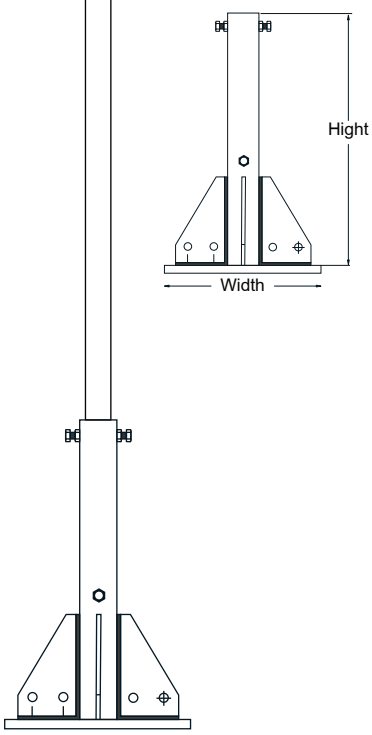

Fixing foundation

Code No.	Dimension (mm) Hight	Width	Weight (kg)
LTSP-F	500	300	15.70

Material
Hot dipgalvanized steel

Application
Suitable for support self-standing lightning pole. Installation with J-bolt 3/4"(on request) fixing ambed in concre foundation.

Metal Sheet Clamp

Kumwell has continually developed and designed Metal Sheet Clamp for easier, faster and more safety to installation on the metal sheet roof when installing lightning protection system to meet IEC 62561.

We have designed it to help you to install Square Neck Bolt and Flange Locking Nut into the square on each side of T-Block easily and faster than ever. The Stopper also enables all accessories double locking tightly. Moreover, the Flange Locking Nut and the Socket are designed to prevent any accessory loosen from Metal Sheet Clamp during installation.

The unique design provide safety and easy work for installer where they can tighten by one hand while another hand can hold safety rope in case of accident.

Due to a large roof area where there are many tons of conductor, metal sheet clamp shall be provide highly mechanical strength to fixing the LPSC parts to the roof as well as good corrosion resistance to suit for any expose environment.

Metal sheet clamp shall be tested according to IEC 62561-4 (Requirement for Conductor Fastener) to secure the safety for installation.

Features & Benefits

- Quick and easy to install
- Safety for installer
- High mechanical strength, firmly secured to roof profile
- Corrosion resistance
- Custom made to suit any roof profile

Metal Sheet Clamp

LYCMSS-AN

LYCMSS-AA

LYCMSS-CN

LYCMSS-C-2N

LYCMSS-DN

LYCMSS-EN

LYCMSS-ON

LYCMSS-QN

LYRHT-AN

LYRHT-BN

Code No.	Weight (kg)
LYCMSS-AN	0.09
LYCMSS-AA	0.09
LYCMSS-CN	0.07
LYCMSS-DN	0.12
LYCMSS-EN	0.08
LYCMSS-N	0.08
LYCMSS-ON	0.12
LYCMSS-QN	0.08
LYRHT-AN	0.03
LYRHT-BN	0.07

Material
Stainless Steel
Bolt - Stainless Steel

Application
Hold tape conductors to metal roof

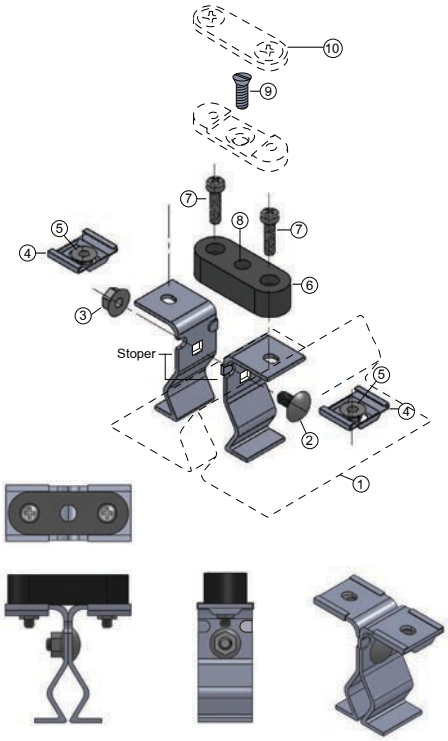

Item	Description	Q'ty
1	Metal Sheet RooF	-
2	Square Neck Bolt M6	1
3	Flang Locking Nut M6	1
4	Socket	2
5	Flang Locking Nut M5	2
6	Insulator	1
7	Screw M5	2
8	Nut 1/4" in Insulator	1
9	Stainless Screw 1/4"	1
10	Tape Support	-

"Quick Installation"

Note : Special new model GI clading can be requested.

Roof Holders

LYRHT 130-120

LYRHT 117-35

For Hip or Ridge Tileds

Code No.	Dimensions (mm) Vary (H) Max.	Vary (H) Min.	Vary (L) Max.	Vary (L) Min.	Weight (kg)
LYRHT 130-120	180	145	340	225	0.25
LYRHT 140-120	156	104	394	207	0.23
LYRHT 117-35	180	90	242	235	0.25

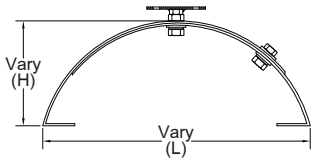

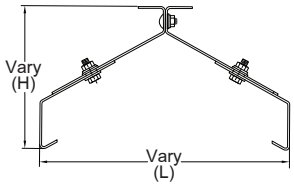

LYRHU-XXX

For Tile Sheet

Code No.	Dimensions (mm) A	B	L	Weight (kg)
LYRHU-702	25	20	205	0.02
LYRHU-704	25	20	475	0.05

Material
Stainless Steel

Application
Hold copper strande / solid or copper / aluminium / solid aluminium conductors for hip, ridge and sheet tiled roof installation

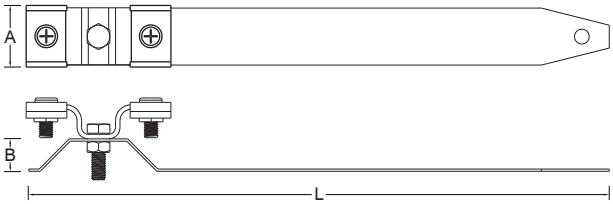

Anti-Vandal Down Conductor Guard

Code No.	Tape Size (mm)	Length (mm)	Weight (kg)
LAVCG	25x3, 25x4	2400	3

Material
Zinc-Coated Steel

Application
Protect tape conductor

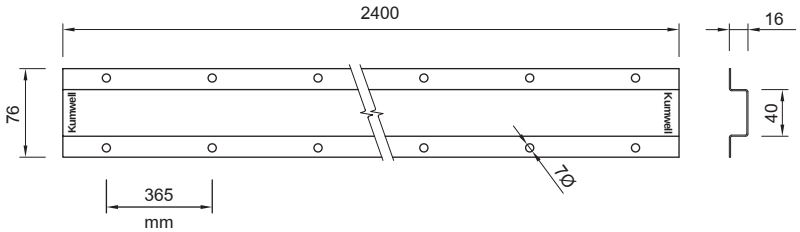

Note : Fix using round head wood screws 1 1/2” x no.10 and wall plug.

Conductor

When designing a structural lightning protection system using the Faraday Cage principle, it is possible to use one or more of a variety of available conductor systems; namely tape conductor, circular conductor or stranded conductor.

The decision about which type to use is often based more on country-specific historical preferences or aesthetic considerations than the superiority of one type over another. High quality Kumwell conductors, plus appropriate fittings, are available for all three systems.

Tape conductor system

Tape conductors are easy to install, with no need to straighten for a neat finish. Available in copper or aluminium, tape conductor can be installed bare or with a choice of PVC coverings, to enable the tape to blend with modern building fabrics. Tinned copper tape is also available for applications that require additional protection measures.

Circular conductor system

Circular conductors can be used in applications where aesthetic considerations are important. Circular conductor is less conspicuous than the tape conductor system, and lends itself much better to being concealed. Available in copper or aluminium, circular conductors can also have PVC coverings.

A coil of circular conductor can be quickly installed, being easy to bend in any plane, and only needing a straightening tool to give a very neat finish.

Stranded conductor system

The Kumwell stranded conductors are available in copper and copper-clad steel wire, and are supplied bare.
The copper-clad steel wire can reduce risk is stolen.

Selection Martials

Martial	Corrosion resistance suitable for	Use		
		In open air	In earth	In concrete
Copper	Normal environments	Solid tape	Solid tape	Solid tape
		Solid round	Solid round	Solid round
		Stranded	Stranded	Stranded
Tin plated copper	Near seaside	Solid tape	Solid tape	Solid tape
		Solid round	Solid round	Solid round
Copper with lead	The chimney emit toxic gas	Solid tape	**Unsuitable**	**Unsuitable**
Tin copper with lead	Area especically high salty and acidty	Solid tape	**Unsuitable**	**Unsuitable**
Aluminium	On the metal sheet roof because it does not corrode	Solid tape	**Unsuitable**	**Unsuitable**
		Solid round		
Copper-Clad steel	Normal environments	Solid tape	Solid tape	Solid tape
		Solid round	Solid round	Solid round

Note: Copper/Aluminium joints should be avoided wherever possible. In cases where they cannot be avoided, the connections should be used Bi-Metallic Connector.

Tape Conductors

Bare Copper

Code No.	Size (mm)	Size (mm^2)	Coil Size (m)	Weight (kg/m)
COBCT 203	20x3	60	100	0.55
COBCT 252	25x2	50	100	0.45
COBCT 253	25x3	75	100	0.67
COBCT 254	25x4	100	100	0.90
COBCT 256	25x6	150	25	1.34
COBCT 303	30x3	90	50	0.81
COBCT 304	30x4	120	50	1.07
COBCT 305	30x5	150	50	1.34
COBCT 324	32x4	128	50	1.15
COBCT 404	40x4	160	50	1.44
COBCT 405	40x5	200	25	1.78
COBCT 406	40x6	240	25	2.15
COBCT 503	50x3	150	20	1.34
COBCT 505	50x5	250	20	2.60
COBCT 506	50x6	300	20	2.68

Test Certificate
IEC 62561 Part 2

Material
Copper - BS EN 13601

Application
Suitable for grounding and lightning protection

Tinned Copper

Code No.	Size (mm)	Size (mm^2)	Coil Size (m)	Weight (kg/m)
COBCT 203T	20x3	60	100	0.55
COBCT 252T	25x2	50	100	0.45
COBCT 253T	25x3	75	100	0.67
COBCT 254T	25x4	100	100	0.90
COBCT 256T	25x6	150	25	1.34
COBCT 303T	30x3	90	50	0.81
COBCT 304T	30x4	120	50	1.08
COBCT 305T	30x5	150	50	1.34
COBCT 324T	32x4	128	50	1.15
COBCT 404T	40x4	160	50	1.43
COBCT 405T	40x5	200	25	1.79
COBCT 406T	40x6	240	25	2.15
COBCT 503T	50x3	150	20	1.34
COBCT 505T	50x5	250	20	2.24
COBCT 506T	50x6	300	20	2.68

Test Certificate
IEC 62561 Part 2

Material
Tin Plated Copper - BS EN 13601

Application
Suitable for grounding and lightning protection in high corrosion resistance area.

Bare Aluminium

Code No.	Size (mm)	Size (mm^2)	Coil Size (m)	Weight (kg/m)
COBAT 253	25x3	75	50	0.20
COBAT 254	25x4	100	50	0.27
COBAT 256	25x6	150	50	0.41

Test Certificate
IEC 62561 Part 2

Material
Aluminium - BS 2898

Application
Suitable for installation on metal roof in lightning protection

Tape Conductors

Galvanized Steel Tape is made of special steel with low resistivity. The electrical resistivity is less than 0.15 μΩm and, tensile strength is less than 490 N/mm^2

Galvanized Steel Tape

Code No.	Size (mm)	Size (mm^2)	Coil Size (m)	Weight (kg/m)
COBGAT 203	20x3	60	50	0.47
COBGAT 3035	30x3.5	105	25	0.83

Test Certificate
IEC 62561 Part 2

Material
Hot-Dip Galvanized Steel

Stainless Steel Tape is made of stainless steel with a chromium ≥ 16%, nickel ≥ 8%, molybdenum ≥ 2% and carbon ≤ 0.07% The electrical resistivity is less than 0.8 μΩm

Stainless Steel Tape

Code No.	Grade	Size (mm)	Size (mm)	Coil Size (m)	Weight (kg/m)
COTSS316L-303.5	316L	30x3.5	105	50	0.84

Test Certificate
IEC 62561 Part 2

Material
Stainless Steel - 316L

Tape Conductors

Copper with PVC

Code No.	Size (mm)	Coil Size (m)	Weight (kg/m)
COBCT 253P	25x3	50	0.77
COBCT 256P	25x6	25	1.53
COBCT 253P-LSHF	25x3	50	0.77
COBCT 256P-LSHF	25x6	25	1.53

Test Certificate
IEC 62561 Part 2

Material
High conductivity copper - BS EN 13601
Green PVC cover with low smoke halogen free (LSHF)

Application
Suitable for down conductor in lightning protection

Aluminium with PVC

Code No.	Size (mm)	Coil Size (m)	Weight (kg/m)
COBAT 253P	25x3	50	0.30
COBAT 254P	25x4	50	0.36
COBAT 253P-LSHF	25x3	50	0.30
COBAT 254P-LSHF	25x4	50	0.36

Test Certificate
IEC 62561 Part 2

Material
Aluminium tape - BS 2898
Green PVC cover with low smoke halogen free (LSHF)

Application
Suitable for down conductor in lightning protection

Copper with Lead

Code No.	Size (mm)	Coil Size (m)	Lead-Cover Thickness (m)	Weight (kg/m)
COBCTL 253	25x3	25	2	2.06
COBCTL 506	50x6	20	2	5.40

Test Certificate
IEC 62561 Part 2

Material
Copper with Lead
(Copper - BS EN 13601)

Application
Suitable for high corrosion area

Tinned Copper with Lead

Code No.	Size (mm)	Coil Size (m)	Lead-Cover Thickness (m)	Weight (kg/m)
COBCTL 506T	50x6	25	2	5.40

Test Certificate
IEC 62561 Part 2

Material
Tinned Copper with Lead
(Copper - BS EN 13601)

Application
Suitable for high corrosion area especially high salty or acidity

Circular Conductors

Bare Aluminium

Code No.	Conductor (Ø) (mm)	Cross Section (mm^2)	Coil Size (m)	Weight (kg/m)
COSA-8	8	50	50	0.136
COSA-10	10	78	50	0.218

Test Certificate
IEC 62561 Part 2

Material
Aluminium - BS 2898

Application
Suitable for grounding and lightning protection conductors in high corrosion area.

Bare Copper

Code No.	Conductor (Ø) (mm)	Cross Section (mm^2)	Coil Size (m)	Weight (kg/m)
COSC-8	8	50	50	0.45
COSC-9.5	9.5	70	50	0.65
COSC-11	11	95	50	0.85
COSC-12.4	12.4	120	50	1.08
COSC-13.9	13.9	150	50	1.36
COSC-15.4	15.4	185	20	1.67
COSC-17.5	17.5	240	20	2.16

Test Certificate
IEC 62561 Part 2

Material
Copper - BS EN 13601

Application
Suitable for grounding and lightning protection conductors.

Tinned Copper

Code No.	Conductor (Ø) (mm)	Cross Section (mm^2)	Coil Size (m)	Weight (kg/m)
COSC-8T	8	50	50	0.45
COSC-9.5T	9.5	70	50	0.65
COSC-11T	11	95	50	0.85

Test Certificate
IEC 62561 Part 2

Material
Tin Plated Copper - BS EN 13601

Application
Suitable for grounding and lightning protection conductors in high corrosion area.

Galvanized Steel Conductor is made of special steel with low resistivity. The electrical resistivity is less than 0.15 μΩm and, tensile strength is less than 490 N/mm^2

Galvanized Steel Circular

Code No.	Conductor (Ø) (mm)	Cross Section (mm^2)	Weight (kg/m)	Coil Lenght (m)	Coil Weight (kg)
COGS-8	8	50	0.395	50	approx.20
COGS-10	10	78	0.620	50	approx.31

Test Certificate
IEC 62561 Part 2

Material
Galvanized Steel

Circular Conductors

Stainless Steel Conductor is made of special steel with low resistivity. The electrical resistivity is less than 0.15 μΩm and, tensile strength is less than 490 N/mm^2

Stainless Steel Circular

Code No.	Grade	Conductor (Ø) (mm)	Cross Section (mm^2)	Weight (kg/m)	Coil Lenght (m)	Coil Weight (kg)
COSS316L-8	316L	8	50	0.401	50	approx.20
COSS316L-10	316L	10	78	0.626	50	approx.32

Test Certificate
IEC 62561 Part 2

Material
Stainless Steel - 316L

Copper with PVC

Code No.	Conductor (Ø) (mm)	Coil Size (m)	Weight (kg/m)
COSC-8P	8	50	0.50
COSC-9.5P	9.5	50	0.70
COSC-8P-LSHF	8	50	0.50
COSC-9.5P-LSHF	9.5	50	0.70

Test Certificate
IEC 62561 Part 2

Material
High conductivity copper - BS EN 13601
Green PVC cover with low smoke halogen free

Application
Suitable for down conductor lightning protection.

Copper-Bonded Steel Round Conductor is made of molecularly bonding pure electrolytic copper onto a low resistivity steel. The electrical resistivity is less than 0.1 μΩm, copper thickness is more than 254 micron as well as tensile strength is less than 490 N/mm^2

Copper-Bonded Steel Round Conductor

Code No.	Conductor (Ø) (mm)	Cross Section (mm^2)	Weight (kg/m)	Coil Lenght (m)	Coil Weight (kg)
WE-COCBU-8	8	50	0.40	50	approx.20
WE-COCBU-10	10	78	0.63	50	approx.32

Test Certificate
IEC 62561 Part 2

Material
Copper-Bonded Steel

Conductor Bender

Conductor Bender is manually bend the conductor to prefered shape.

Code No.	Conductor Size (mm)	Weight (kg/set)
TOHCS 8-10	8-10	1.72

Note :1 set = 2 pieces

Conductor Straightener

Conductor Straightner is manually machine for conductor size 8-10 mm

Code No.	Conductor Size (mm)	Weight (kg/set)
TOCS 8-10	8-10	11.85

Conductor Straightener with electric drive

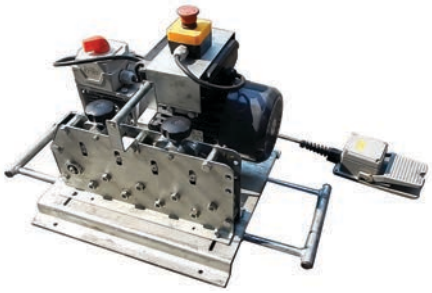

Conductor Straightner with electric drive is motor drive machine for conductor size 8-10 mm

Code No.	Conductor Size (mm)	Weight (kg/set)
TOHCS 8-10P	8-10	Approx. 50

Annealed Copper-Clad Steel Wire

Kumwell Annealed Copper-Clad Steel Wire or CCS is made from copper cladding metallurgical bonded to concentric steel core with continuous solid cladding process. According to International Annealed Copper Standard (IACS), it is taken as 30% conductivity which is suitable for transmission line's and grounding in high corrosive area such as seaside.

Benefit

- High Conductivity
- High corrosoin resistance

Code No.	Cable Size (AWG)	Cable Size (mm^2)	Diameter of Wire (mm)	Weight (kg/m)
Single wire				
2AWG	2	33.62	6.54	274
WE-COSW20-50	-	50.24	8.0	402
WE-COSW20-70	-	78.5	10.0	628
7 wire strand				
WE-COSS30-016	4	16.40	1.73	91
WE-COSS30-050	1/0	53.49	3.12	440
WE-COSS30-070	2/0	67.32	3.50	546
WE-COSS30-095	7 No.7	93.09	4.11	766
19 wire strand				
WE-COSS30-120	19 No.9	126.00	2.91	1041
WE-COSS30-150	19 No.8	158.97	3.26	1314
WE-COSS30-240	19 No.6	252.66	4.11	2088

Test Certificate
IEC 62561 Part 2 (For cable size ≥ 50 sq.mm only)

Material
Annealed Copper - Clad Steel Wire - ASTM B 910-B 910 M

Stranded Copper Conductor

Code No.	Cable Size (mm^2)	Number and Diameter of Wire (no./mm.)	Approx.Weight per Mtr (kg)
COSC 010	10	7/1.35	0.09
COSC 016	16	7/1.70	0.14
COSC 025	25	7/2.14	0.23
COSC 035	35	7/2.52	0.32
COSC 050	50	19/1.78	0.43
COSC 070	70	19/2.14	0.62
COSC 095	95	19/2.52	0.86
COSC 120	120	19/2.85	1.10
COSC 150	150	37/2.52	1.33
COSC 185	185	37/2.52	1.68
COSC 210150	240	61/2.25	2.20
COSCS 070	70	7/3.55	0.64

Test Certificate
IEC 6256 Part 2 (For cable size ≥ 50 sq.mm only)

Material
Copper

High Voltage Insulating Down Conductor Cable (KHV)

KHV Cable with a voltage-controlled sheath is typically used as an isolated down conductor in the field of lightning protection for control the separation distance according to IEC 62305-3

Separation distance : There is a risk of uncontrolled flashover between parts of the external lightning protection system and metal and electrical installations in the building if the distance between the air termination system or down conductor and metal, electrical installations in the structure requiring protection is not sufficient. The separation distance is calculated according to IEC 62305-3. Advantage of KHV cable is the decrease of separation distance.

Code No.	KHV 50 II
Cross-section of the inner conductor (Cu)	50 mm^2
Equivalent separate distance s (air)	≤ 0.50 m
Equivalent separate distance s (solid material)	≤ 1.00 m
Cable weight (approx.)	1058 (kg/km)
Cable length / Coil	50 (m)
Colour of conductor	Black
Diameter Ø conductor	28.4 mm + 10%

Test Certificate
IEC 62561 Part 8

Material
Copper

Application
- **LPS installation shall be consider the safety separation distance (SSD) to prevent the consequences of lightning current from LPS components to nearby equipment e.g. satellite, solar panel, chiller, AHU, etc.**
- **Using for installation in explosion hazardous areas Ex zone 1 (gases, vapours, mists) as well as Ex zone 21 (dusts).**

Insulating Cable (KIC)

The area at risk of touch voltages for persons outside a building is located within a distance of 3 m. around the down conductor and at a height of 3 m from ground level. The Insulation of the down-conductor is tested by a 100 kV, 1.2/50 μs impulse withstand voltage shall be adopted for protect dangerous of touch voltage.

The KIC conductor has a copper core and a high voltage resistant XLPE insulation.

Code No.	KIC 50
Material of conductor	Cu
Material of insulation	XLPE
Outer sheath	UV-Resistant, Flame Retardant
Overall diameter	20 mm
Cross-section of the inner conductor	50 mm^2
Colour of conductor	Gray

Test Certificate
IEC 62561 Part 2
High Voltage 100 kV (1.2/50 us)

Material
Conductor : Copper
Insulation : XLPE
Sheath : UV resistant PO

Application
- **The KIC Conductor is used as part of a down conductor system installed near the entrance of sheltering areas of buildings with high visitor frequency, such as theatres, cinemas, shopping centres, etc. Buildings or structures with public access (e.g. shelters).**

Copper Lugs

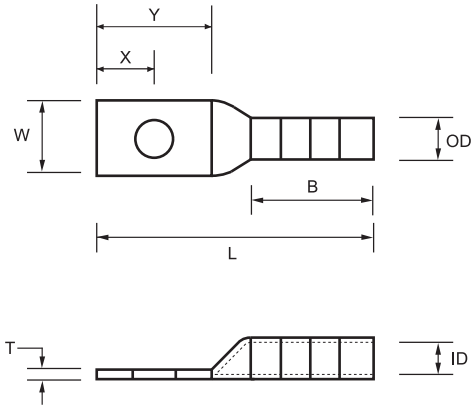

1-Hole Copper Lugs

Code No.	Copper Conductor AWG/MCM	Copper Conductor mm^2	Stud Size	Dimensions (in) I.D	O.D	L	W	X	Y	T	B
KOH 8-6	8	-	1/4”	0.18	0.28	1.53	0.43	0.25	0.62	0.10	0.71
KOH 6-6	6	16	1/4”	0.22	0.31	1.93	0.48	0.25	0.62	0.08	1.07
KOH 4-6	4	25	1/4”	0.28	0.38	1.95	0.55	0.25	0.62	0.09	1.07
KOH 2-8	2	35	5/16”	0.31	0.42	2.27	0.66	0.32	0.76	0.10	1.16
KOH 1/0-12	1/0	50	1/2”	0.40	0.52	2.82	0.76	0.47	1.10	0.12	1.44
KOH 2/0-12	2/0	70	1/2”	0.45	0.58	3.12	0.85	0.50	1.13	0.13	1.50
KOH 3/0-12	3/0	95	1/2”	0.51	0.64	3.14	0.96	0.50	1.13	0.13	1.50
KOH 4/0-12	4/0	-	1/2”	0.58	0.71	3.24	1.06	0.50	1.13	0.14	1.56
KOH 250-12	250	120	1/2”	0.63	0.77	3.36	1.17	0.50	1.13	0.14	1.61
KOH 300-12	300	150	1/2”	0.65	0.81	3.91	1.19	0.53	1.16	0.19	2.05
KOH 350-12	350	-	1/2”	0.70	0.88	3.91	1.28	0.53	1.16	0.19	2.05
KOH 400-16	400	185	5/8”	0.76	0.95	4.14	1.41	0.66	1.35	0.19	2.17
KOH 500-16	500	240	5/8”	0.84	1.06	4.50	1.53	0.66	1.35	0.22	2.30
KOH 600-16	600	300	5/8”	0.92	1.19	5.11	1.69	0.88	1.76	0.28	2.67
KOH 750-16	750	-	5/8”	1.03	1.30	5.67	1.75	0.88	1.94	0.28	2.88
KOH 800-16	800	400	5/8”	1.05	1.35	5.67	1.89	0.88	1.94	0.29	2.88
KOH 1000-16	1000	500	5/8”	1.17	1.50	6.23	2.16	0.97	2.16	0.34	2.99

Test Certificate
IEC 62561 Part 1
UL 486
NEMA CC1

Material
One piece seamless, high conductivity pure electrolytic copper and tin plated

Application
Long Barrel lugs are usable with high voltage up to 35 kV
Suitable for grounding and lightning protection system

Copper Lugs

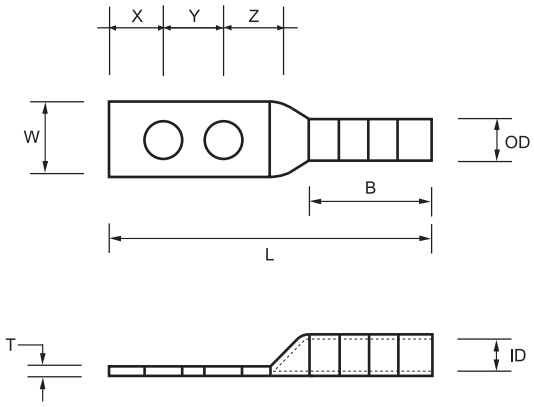

2-Hole Copper Lugs

Code No.	Copper Conductor AWG/MCM	Copper Conductor mm^2	Stud Size	Dimensions (in) I.D	O.D	L	W	X	Y	Z	T	B
KTH 8-6 C	8	-	1/4”	0.18	0.28	2.16	0.43	0.25	0.63	0.37	0.10	0.71
KTH 6-6 C	6	16	1/4”	0.22	0.34	2.72	0.59	0.39	0.79	0.39	0.08	0.67
KTH 6-8 C	6	16	5/16”	0.22	0.34	2.72	0.59	0.39	0.79	0.39	0.08	0.67
KTH 4-8 C	4	25	5/16”	0.28	0.38	2.72	0.59	0.39	0.79	0.39	0.09	0.90
KTH 2-8 C	2	35	5/16”	0.31	0.42	3.02	0.66	0.36	0.79	0.44	0.10	1.13

Test Certificate
IEC 62561 Part 1

Material
One piece seamless, high conductivity pure electrolytic copper and tin plated

Application
Long Barrel lugs are usable with high voltage up to 35 kV
Suitable for grounding and lightning protection system

Copper Lugs

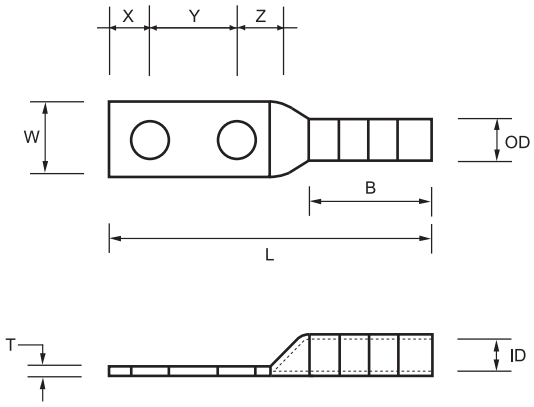

2-Hole Copper Lugs

Code No.	Copper Conductor AWG/MCM	Copper Conductor mm^2	Stud Size	Dimensions (in) I.D	O.D	L	W	X	Y	Z	T	B
KTH 8-6 DN	8	-	1/4”	0.18	0.28	2.16	0.43	0.25	0.63	0.37	0.10	0.71
KTH 6-6 DN	6	16	1/4”	0.22	0.31	2.56	0.48	0.25	0.63	0.37	0.08	1.07
KTH 4-6 DN	4	25	1/4”	0.28	0.38	2.58	0.55	0.25	0.63	0.37	0.09	1.07
KTH 2-8 DN	2	35	5/16”	0.31	0.42	3.02	0.66	0.36	0.75	0.44	0.10	1.16
KTH 1/0-12 DN	1/0	50	1/2”	0.40	0.52	4.90	0.76	0.63	1.75	0.63	0.12	1.44
KTH 2/0-12 DN	2/0	70	1/2”	0.45	0.58	4.98	0.85	0.63	1.75	0.63	0.13	1.50
KTH 3/0-12 DN	3/0	95	1/2”	0.51	0.64	4.98	0.96	0.63	1.75	0.63	0.13	1.50
KTH 4/0-12 DN	4/0	-	1/2”	0.58	0.71	5.13	1.06	0.63	1.75	0.63	0.14	1.56
KTH 250-12 DN	250	120	1/2”	0.63	0.77	5.23	1.17	0.63	1.75	0.63	0.14	1.61
KTH 300-12 DN	300	150	1/2”	0.65	0.81	5.80	1.19	0.63	1.75	0.63	0.19	2.05
KTH 350-12 DN	350	-	1/2”	0.70	0.88	5.80	1.28	0.63	1.75	0.75	0.19	2.05
KTH 400-12 DN	400	185	1/2”	0.76	0.95	6.05	1.41	0.63	1.75	0.75	0.19	2.17
KTH 500-12 DN	500	240	1/2”	0.84	1.06	6.11	1.53	0.63	1.75	0.75	0.22	2.30
KTH 600-12 DN	600	300	1/2”	0.92	1.19	6.77	1.69	0.63	1.75	0.75	0.28	2.67
KTH 750-12 DN	750	-	1/2”	1.03	1.30	7.05	1.75	0.63	1.75	0.75	0.28	2.88
KTH 800-12 DN	800	400	1/2”	1.05	1.35	7.05	1.89	0.63	1.75	0.75	0.29	2.88
KTH 1000-12 DN	1000	500	1/2”	1.17	1.50	7.26	2.16	0.63	1.75	0.75	0.34	2.99

Test Certificate
IEC 62561 Part 1
UL 486
NEMA CC1

Material
One piece seamless, high conductivity pure electrolytic copper and tin plated

Application
Long Barrel lugs are usable with high voltage up to 35 kV
Suitable for grounding and lightning protection system

Copper Lugs

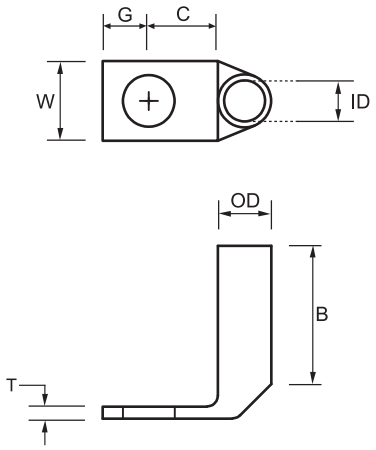

Copper Lugs One-Hole Long Barrel 90° Pad

Code No.	Copper Conductor AWG/MCM	Copper Conductor mm²	Stud Size	Dimensions (in) I.D	O.D	W	G	C	T	B
KOHL 8-6	8	-	1/4”	0.18	0.28	0.43	0.25	0.37	0.10	0.71
KOHL 6-6	6	16	1/4”	0.22	0.31	0.48	0.25	0.37	0.08	1.07
KOHL 4-6	4	25	1/4”	0.28	0.38	0.55	0.25	0.37	0.09	1.07
KOHL 2-8	2	35	5/16”	0.31	0.42	0.66	0.32	0.44	0.10	1.16
KOHL 1/0-12	1/0	50	1/2”	0.40	0.52	0.76	0.47	0.63	0.12	1.44
KOHL 2/0-12	2/0	70	1/2”	0.45	0.58	0.85	0.50	0.63	0.13	1.50
KOHL 3/0-12	3/0	95	1/2”	0.51	0.64	0.96	0.50	0.63	0.13	1.50
KOHL 4/0-12	4/0	-	1/2”	0.58	0.71	1.06	0.50	0.63	0.14	1.56
KOHL 250-12	250	120	1/2”	0.63	0.77	1.17	0.63	0.63	0.14	1.61
KOHL 300-12	300	150	1/2”	0.65	0.81	1.19	0.63	0.63	0.19	2.05
KOHL 350-12	350	-	1/2”	0.70	0.88	1.28	0.63	0.63	0.19	2.05
KOHL 400-16	400	185	5/8”	0.76	0.95	1.41	0.66	0.69	0.19	2.17
KOHL 500-16	500	240	5/8”	0.84	1.06	1.53	0.66	0.69	0.22	2.30
KOHL 600-16	600	300	5/8”	0.92	1.19	1.69	0.88	0.88	0.28	2.67
KOHL 750-16	750	-	5/8”	1.03	1.30	1.75	0.88	1.06	0.28	2.88
KOHL 800-16	800	400	5/8”	1.05	1.35	1.89	0.88	1.06	0.29	2.88
KOHL 1000-16	1000	500	5/8”	1.17	1.50	2.16	0.97	1.19	0.34	2.99

Test Certificate
IEC 62561 Part 1
UL 486
NEMA CC1

Material
One piece seamless, high conductivity pure electrolytic copper and tin plated

Application
Long Barrel lugs are usable with high voltage up to 35 kV
Suitable for grounding and lightning protection system

Copper Lugs

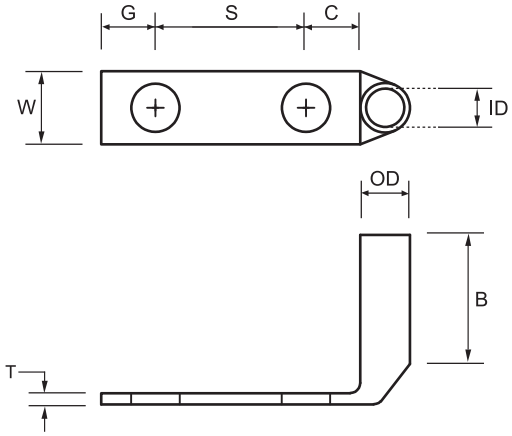

Copper Lugs Two-Hole Long Barrel 90° Pad

Code No.	Copper Conductor AWG/MCM	Copper Conductor mm^2	Stud Size	Dimensions (in) I.D	O.D	W	G	S	C	T	B
KTHL 8-6 DN	8	-	1/4”	0.18	0.28	0.43	0.25	0.63	0.37	0.10	0.71
KTHL 6-6 DN	6	16	1/4”	0.22	0.31	0.48	0.25	0.63	0.37	0.08	1.07
KTHL 4-6 DN	4	25	1/4”	0.28	0.38	0.55	0.25	0.63	0.37	0.09	1.07
KTHL 2-8 DN	2	35	5/16”	0.31	0.42	0.66	0.36	0.75	0.44	0.10	1.16
KTHL 1/0-12 DN	1/0	50	1/2”	0.40	0.52	0.76	0.63	1.75	0.63	0.12	1.44
KTHL 2/0-12 DN	2/0	70	1/2”	0.45	0.58	0.85	0.63	1.75	0.63	0.13	1.50
KTHL 3/0-12 DN	3/0	95	1/2”	0.51	0.64	0.96	0.63	1.75	0.63	0.13	1.50
KTHL 4/0-12 DN	4/0	-	1/2”	0.58	0.71	1.06	0.63	1.75	0.63	0.14	1.56
KTHL 250-12 DN	250	120	1/2”	0.63	0.77	1.17	0.63	1.75	0.63	0.14	1.61
KTHL 300-12 DN	300	150	1/2”	0.65	0.81	1.19	0.63	1.75	0.63	0.19	2.05
KTHL 350-12 DN	350	-	1/2”	0.70	0.88	1.28	0.63	1.75	0.75	0.19	2.05
KTHL 400-12 DN	400	185	1/2”	0.76	0.95	1.41	0.63	1.75	0.75	0.19	2.17
KTHL 500-12 DN	500	240	1/2”	0.84	1.06	1.53	0.63	1.75	0.75	0.22	2.30
KTHL 600-12 DN	600	300	1/2”	0.92	1.19	1.69	0.63	1.75	0.75	0.28	2.67
KTHL 750-12 DN	750	-	1/2”	1.03	1.30	1.75	0.63	1.75	0.75	0.28	2.88
KTHL 800-12 DN	800	400	1/2”	1.05	1.35	1.89	0.63	1.75	0.75	0.29	2.88
KTHL 1000-12 DN	1000	500	1/2”	1.17	1.50	2.16	0.63	1.75	0.75	0.34	2.99

Test Certificate
IEC 62561 Part 1
UL 486
NEMA CC1

Material
One piece seamless, high conductivity pure electrolytic copper and tin plated

Application
Long Barrel lugs are usable with high voltage up to 35 kV
Suitable for grounding and lightning protection system

Copper Lugs

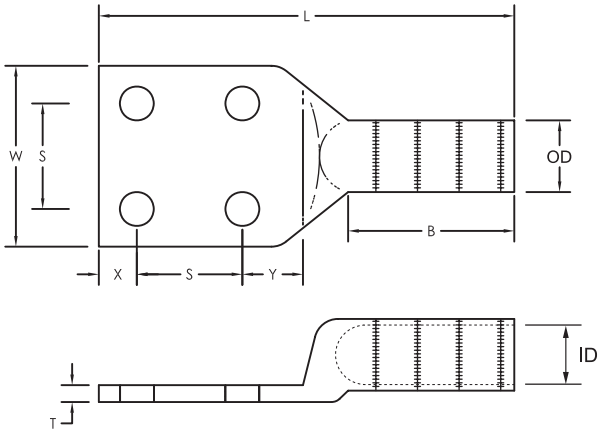

4 - Hole Copper Lugs

Code No.	Copper Conductor MCM	Copper Conductor mm^2	Stud Size	Dimensions (in) I.D	O.D	L	W	X	S	Y	T	B	Weight (kg)
KFH 250-12N	250	120	1/2”	0.63	0.77	5.23	3	0.63	1.75	0.75	0.14	1.61	0.26
KFH 300-12N	300	150	1/2”	0.65	0.81	5.80	3	0.63	1.75	0.75	0.19	2.05	0.37
KFH 350-12N	350	-	1/2”	0.70	0.88	5.80	3	0.63	1.75	0.75	0.19	2.05	0.38
KFH 400-12N	400	185	1/2”	0.76	0.95	6.05	3	0.63	1.75	0.75	0.19	2.17	0.39
KFH 500-12N	500	240	1/2”	0.84	1.06	6.11	3	0.63	1.75	0.75	0.22	2.30	0.48
KFH 600-12N	600	300	1/2”	0.92	1.19	6.77	3	0.63	1.75	0.75	0.28	2.67	0.69
KFH 750-12N	750	-	1/2”	1.03	1.30	7.05	3	0.63	1.75	0.75	0.28	2.88	0.71
KFH 800-12N	800	400	1/2”	1.05	1.35	7.05	3	0.63	1.75	0.75	0.29	2.88	0.83
KFH 1000-12N	1000	500	1/2”	1.17	1.50	7.25	3	0.63	1.75	0.75	0.34	2.98	0.92
KFH 1250-12N	1250	630	1/2”	1.30	1.68	7.50	3	0.63	1.75	0.75	0.40	3.19	1.22
KFH 1500-12N	1500	-	1/2”	1.44	1.85	7.50	3	0.63	1.75	0.75	0.40	3.19	1.30
KFH 2000-12N	2000	1000	1/2”	1.67	2.14	8.16	3.06	0.63	1.75	0.75	0.46	3.14	1.66

Test Certificate
IEC 62561 Part 1
UL 486
NEMA CC1

Material
One piece seamless, high conductivity pure electrolytic copper and tin plated

Application
Long Barrel lugs are usable with high voltage up to 35 kV
Suitable for grounding and lightning protection system

Copper Lugs

UL LISTED
TERMINAL CONNECTOR
3RC9

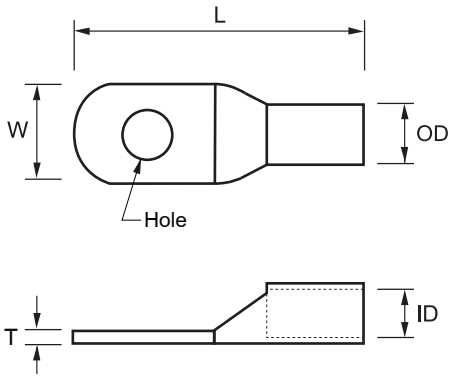

Code No.	Cable (mm^2)	Hole (mm)	Dimensions (mm) I.D	O.D	L	W	T	Weight (kg)
KOL 10-6	10	6.4	4.5	6.2	25	10.0	1.5	0.002
KOL 10-8		8.4			25	12.6	1.5	
KOL 16-6	16	6.4	5.4	7.1	30	10.0	1.5	0.01
KOL 16-8		8.4			30	12.6	1.5	
KOL 25-6	25	6.4	6.8	8.8	30	12.6	1.5	0.01
KOL 25-8		8.4			30	12.6	1.5	
KOL 25-10		10.5			31	15.0	1.5	
KOL 35-6	35	6.4	8.2	10.6	35	15.0	2.5	0.01
KOL 35-8		8.4			35	15.0	2.5	
KOL 35-10		10.5			35	15.0	2.5	
KOL 35-12		13			35	18.6	2.5	
KOL 50-8	50	8.4	9.5	12.4	43	18.0	3.0	0.02
KOL 50-10		10.5			43	18.0	3.0	
KOL 50-12		13			43	19.0	3.0	
KOL 70-8	70	8.4	11.2	14.7	50	21.0	3.4	0.03
KOL 70-10		10.5			50	21.0	3.4	
KOL 70-12		13			50	21.0	3.4	
KOL 95-8	95	8.4	13.5	17.4	55	25.5	3.4	0.04
KOL 95-10		10.5						
KOL 95-12		13						
KOL 120-10	120	10.5	15	19.4	60	28.0	4.0	0.06
KOL 120-12		13						
KOL 120-14		15						
KOL 120-16		17						
KOL 150-10	150	10.5	16.5	21.2	69	30.5	4.0	0.08
KOL 150-12		13						
KOL 150-14		15						
KOL 150-16		17						
KOL 185-12	185	13	18.5	23.5	78	34.0	4.5	0.10
KOL 185-14		15						0.10
KOL 185-16		17						0.09
KOL 240-12	240	13	21	26.5	92	38.5	5.5	0.16
KOL 240-14		15						0.16
KOL 240-16		17						0.17
KOL 240-18		19						0.17
KOL 300-12	300	13	23.5	30.0	101	43.5	6.5	0.23
KOL 300-14		15						
KOL 300-16		17						
KOL 300-18		19						
KOL 400-14	400	15	28.5	36.5	114	53.0	7.5	0.40
KOL 400-16		17						0.40
KOL 400-18		19						0.39
KOL 400-20		21						0.39
KOL 500-14	500	15	29.7	38.1	124	56.0	8.5	0.46
KOL 500-16		17						0.46
KOL 500-18		19						0.45
KOL 500-20		21						0.45

Test Certificate
IEC 62561 Part 1
UL 486
NEMA CC1

Material
One piece seamless, high conductivity pure electrolytic copper and tin plated

Application
These terminals are designed for low voltage up to 600V
Suitable for grounding and lightning protection system

Copper C-Clamp

Code No.	Cable Size (mm^2) Run	Tap	Weight (kg)	Hydraulic crimping tools HCT-S1	HCT-M1	HCT-P1
CCC 6-6	6-2.5	6-1.5	0.01	-	-	-
CCC 10-10	10	10-1.5	0.01	MC 10	MC 10	-
CCC 16-16	16	16-1.5	0.02	MC 25	MC 25	-
CCC 25-10	25	10-1.5	0.02	MC 25	MC 25	-
* CCC 25-25	25	25-10	0.02	MC 25	MC 25	-
CCC 35-16	35	16-1.5	0.04	MC 35	MC 35	-
* CCC 35-35	35	35-10	0.04	MC 35	MC 35	-
CCC 50-25	50	25-4	0.08	MC 70	MC 70	-
* CCC 50-50	50	50-35	0.09	MC 70	MC 70	-
CCC 70-35	70	35-4	0.08	MC 70	MC 70	-
* CCC 70-70	70	70-35	0.08	MC 70	MC 70	-
CCC 95-35	95	35-4	0.13	-	MC 95	MC 95
* CCC 95-95	95	95-50	0.12	-	MC 95	MC 95
* CCC 120-120	120	120-25	0.17	-	MC 185	MC 185
* CCC 150-150	150	150-25	0.13	-	MC 185	MC 185
* CCC 185-95	185	95-25	0.13	-	MC 185	MC 185
CCC 185-185	185	185-120	0.23	-	-	MC 300
CCC 240-70	240	70-35	0.22	-	-	MC 300
CCC 240-120	240	120-95	0.24	-	-	MC 300
CCC 240-240	240	240-120	0.32	-	-	MC 300
CCC 300-300	300	300-120	0.28	-	-	MC 300

UL LISTED
GROUND CLAMP
32 UG

Test Certificate
IEC 62561 Part 1
UL 467

Material
High purity copper profiles

Application
Suitable for copper cable connection in grounding and lightning protection by using hydraulic crimping tools, HCT-S1, HCT-M1 and HCT-P1

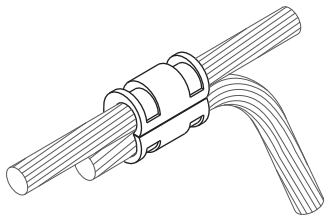

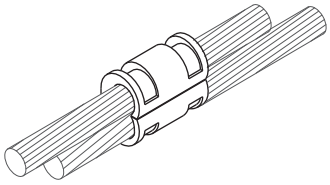

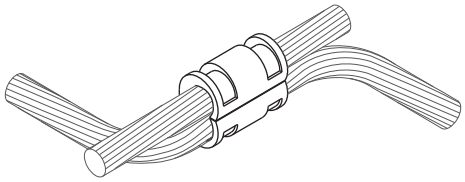

Note : " * " means to meet UL Listed

Copper C-Clamp With Tin

Code No.	Cable Size (mm^2) Run	Tap	Weight (kg)	Hydraulic crimping tools HCT-S1	HCT-M1	HCT-P1
CCC 6-6T	6-2.5	6-1.5	0.01	-	-	-
CCC 10-10T	10	10-1.5	0.01	MC 10	MC 10	-
CCC 16-16T	16	16-1.5	0.02	MC 25	MC 25	-
CCC 25-10T	25	10-1.5	0.02	MC 25	MC 25	-
CCC 25-25T	25	25-10	0.02	MC 25	MC 25	-
CCC 35-16T	35	16-1.5	0.04	MC 35	MC 35	-
CCC 35-35T	35	35-10	0.04	MC 35	MC 35	-
CCC 50-25T	50	25-4	0.08	MC 70	MC 70	-
CCC 50-50T	50	50-35	0.09	MC 70	MC 70	-
CCC 70-35T	70	35-4	0.08	MC 70	MC 70	-
CCC 70-70T	70	70-35	0.08	MC 70	MC 70	-
CCC 95-35T	95	35-4	0.13	-	MC 95	MC 95
CCC 95-95T	95	95-50	0.12	-	MC 95	MC 95
CCC 120-120T	120	120-25	0.17	-	MC 185	MC 185
CCC 150-150T	150	150-25	0.13	-	MC 185	MC 185
CCC 185-95T	185	95-25	0.13	-	MC 185	MC 185
CCC 185-185T	185	185-120	0.23	-	-	MC 300
CCC 240-70T	240	70-35	0.22	-	-	MC 300
CCC 240-120T	240	120-95	0.24	-	-	MC 300
CCC 240-240T	240	240-120	0.32	-	-	MC 300
CCC 300-300T	300	300-120	0.28	-	-	MC 300

Test Certificate
IEC 62561 Part 1

Material
High purity copper profiles and tin plated.

Application
Suitable for copper cable connection in grounding and lightning protection by using hydraulic crimping tools, HCT-S1, HCT-M1 and HCT-P1

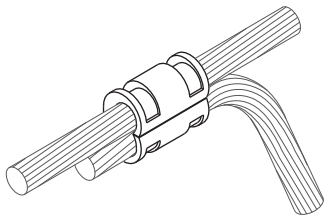

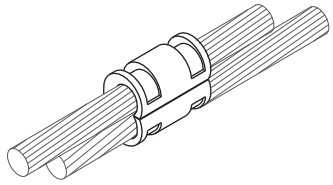

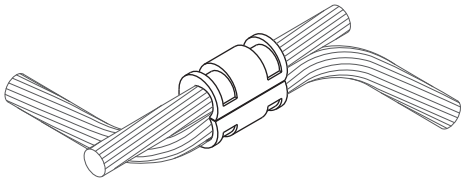

Hydraulic Crimping Tool

Hexagon die Round die

HCT-S1

HCT-S1 Hydraulic Crimping Tool with interchangeable die is suitable for compression of electrical connector on copper or aluminum lug and C-Clamp with 180 degree fully rotated tool head.

Specification
Crimping force 60 KN
Stroke 17 mm
Length 460 mm
Weight 3.3 kg

Application
Copper Lugs size 10-300 mm^2
C-Clamp Code no. CCC 10-10 to CCC 70-70

HCT-M1

HCT-M1 Hydraulic Crimping Tool with interchangeable die is suitable for compression of electrical connector on copper or aluminum lug and C-Clamp with 180 degree fully rotated tool head. The double speed action provides a fast advance speed for rapid approach of the dies to the connector and a lower more powerful speed for crimping.

Specification
Crimping force 120 KN
Stroke 42 mm
Length 550 mm
Weight 7.0 kg

Application
Copper Lugs size 10-400 mm^2
C-Clamp Code no. CCC 10-10 to CCC 185-95

HCT-P1

HCT-P1 Hydraulic Pump Set is suitable for electrical connector and a die for connector copper or aluminium lug and C-Clamp in advance operation and no electricity. Oil can be releasedquickly with 2 stages of high and low pressure which are available besides quick coupling.

Specification
Crimping force 540 KN
Stroke 28 mm
Length 380 mm
Weight 43.4 kg
Hydraulic pump 11.4 kg
Crimping tool 32 kg

Application
Copper Lugs size 400-1000 mm^2
C-Clamp Code no. CCC 95-35 to CCC 300-300

Innovation

Smart Lightning Management System

The innovative intelligent system by Kumwell providing the smart monitoring and overview real-time reporting on the status of installed systems in your area ie. lightning protection system, grounding and surge protection system etc. Smart Lightning Management system could promptly alarm on a dangerous threat by lightning and electromagnetic fields providing safety to every life in the working area and public places and reducing risk of damage to property, buildings, communication failure and any management system.

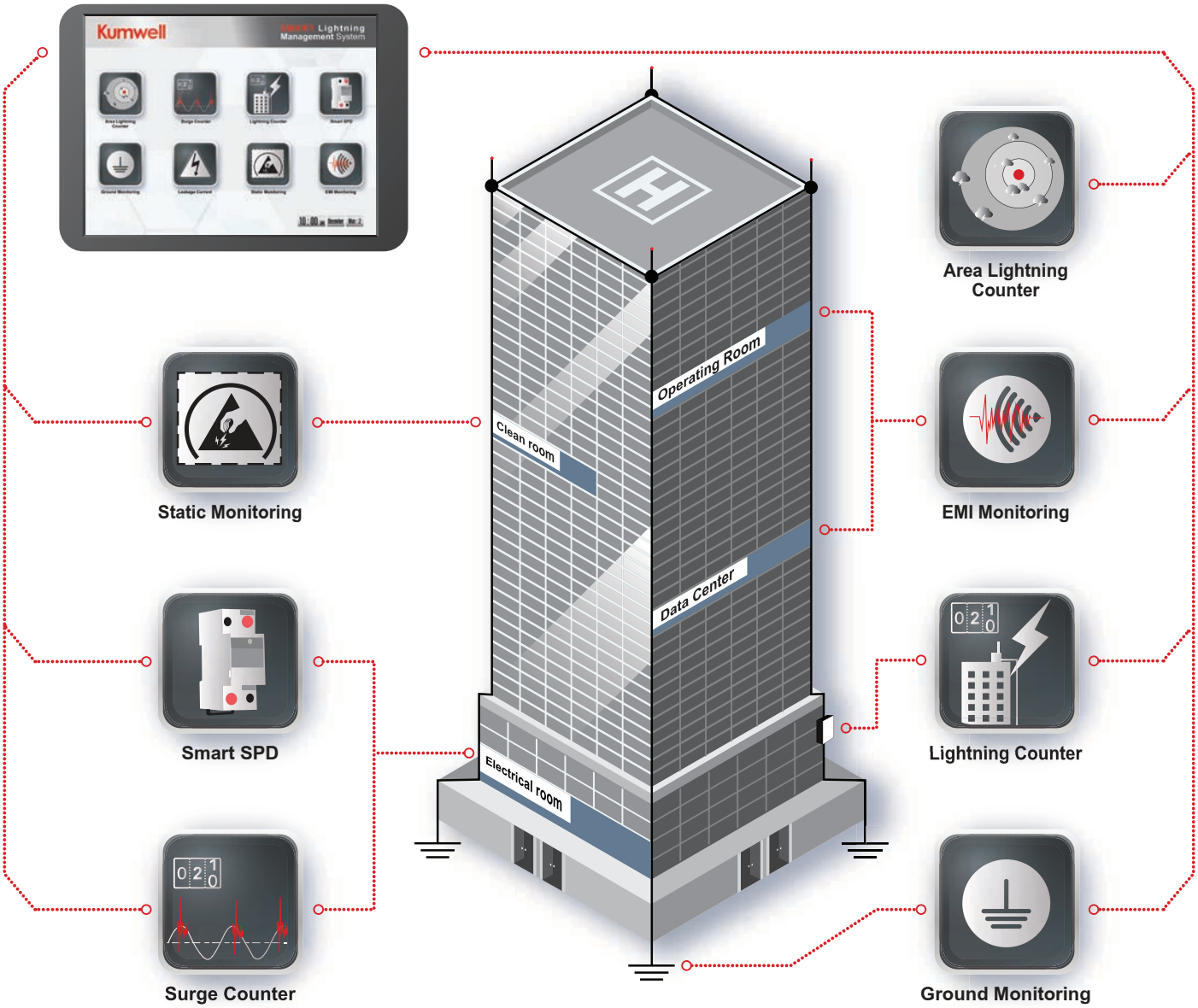

Innovation

Smart Lightning Management System

SMART
Smart system : Promptly alarm on a dangerous threat by lightning and electromagnetic fields

SAFETY
Safety : Establish higher safety level to person and public areas

SECURITY
Security : Provide electrical, electronic, communication and operating system continually run in stability and reliability

SAVE
Save : Reduce risk of damage to property, buildings, electrical, electronic, communication and operating system as well as reduce the maintenance cost.

Features

- Real-time grounding system monitoring.
- Surge counter with latest date/time display.
- Lightning impulse counter with impulse current and latest date/time display.
- Area Lightning Counter Record the lightning event within an area of concern (AOC). Display and record the latest 5 lightning strike in AOC, showing the date/time, amplitude (kA), daily number of total strike.
- Monitor the electromagnetic interference (EMI) in dedicated surrounding. Display the electromagnetic field (EMF), electric field (EF) and radio frequency power (RF).
- Compatible with Kumwell Smart SPD. Real-time monitor the lifetime of SPD, leakage current, temperature and surge countering.
- Alert when there is electrostatic exceed the limit in the monitoring area. Which is extremely dangerous for hazardous areas such as paint mixing, fuel tank, etc.
- Real-time leakage current monitoring.
- Temperature and Humidity
- Prompt alarm when system failure has occurred.
- Multifunction Display showing status of individual system, alarm and data logger.
- Data transfer to PC client or server to show data logger and report (optional).

Innovation

Smart Lightning Management System : KSLM - Configuration

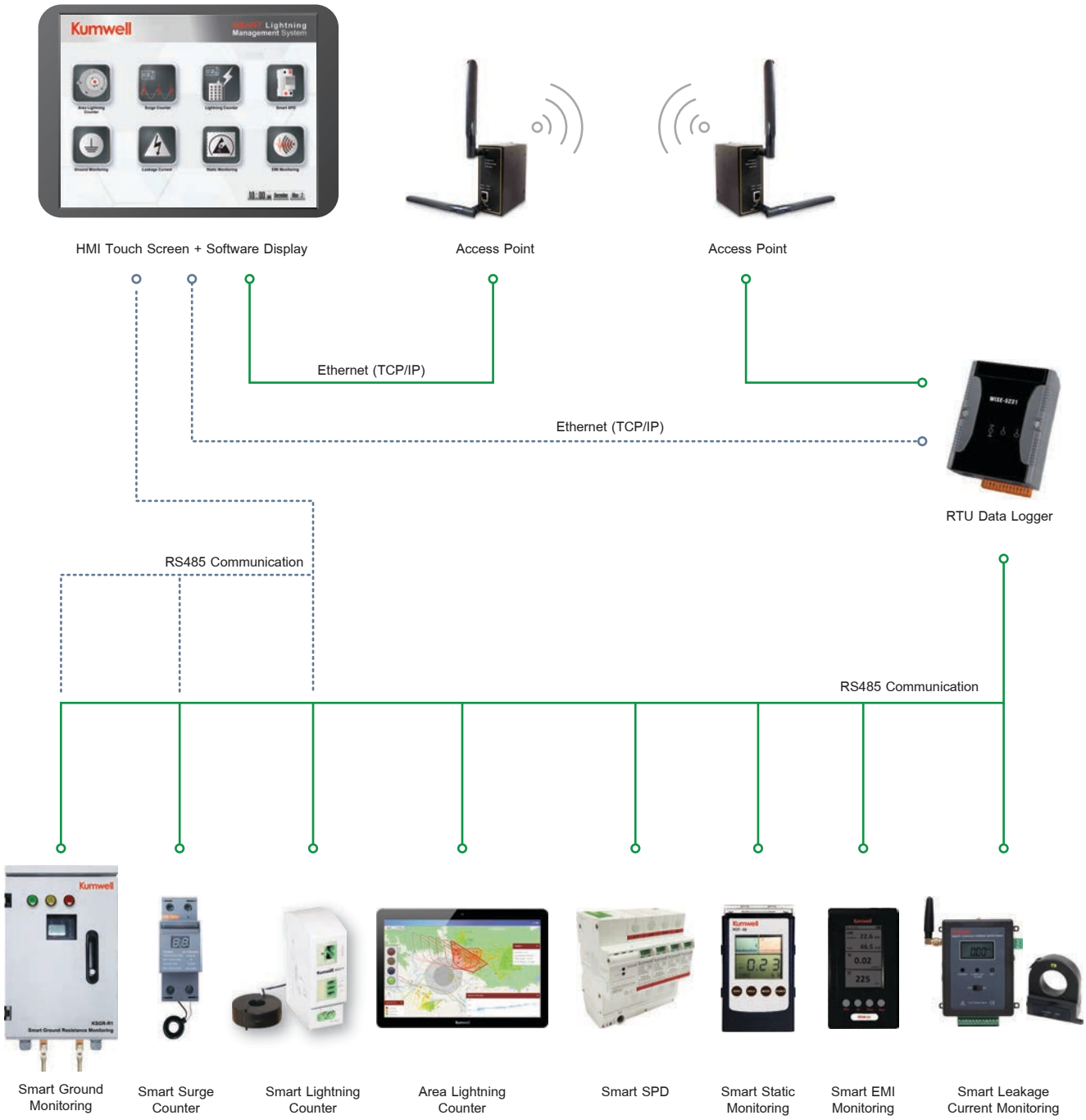

Remote Ground Monitoring System

Introduction

The grounding system reliability and efficiency for plants based on remote monitoring technique, it is success by using SMS data sending multi point resistance data to multi users systems anywhere via SMS mobile phone. By calculating loop resistance, it can detect fluctuations in the installation's grounding caused by accidental grounding disconnection, deterioration of the installation grounding or terrain, and equipment theft

Principle

The synchronous rectifier receives voltage and current data and send them to processor calculation. We obtain resistance value and read out display. If resistance value is more than setting value, then alarm appears. Next, it sends data to Remote terminal unit (RTU) via MODBUS and send SMS data to a mobile phone.

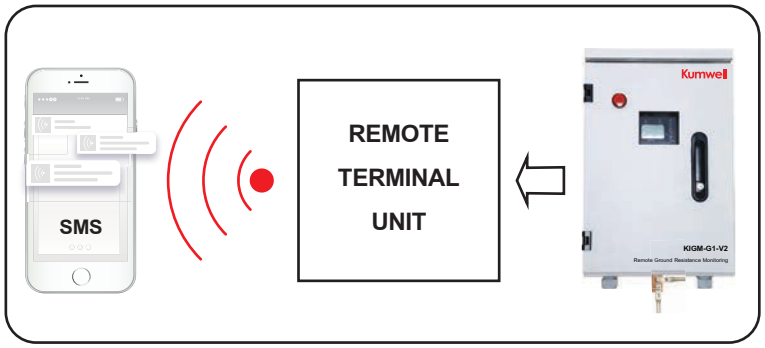

Field application

Easy to adapt by different target requirement. Following segments: Oil & Gas Plant, Tank Farm, Data Center Grounding, Petrochemical Plant etc.

Kumwell has developed Remote Grounding Monitoring System to increase reliability of grounding system by Real-Time grounding resistance detection and alert via SMS by Kumwell MODBUS RTU.

Benefit

- Safety System and Reliable Operation.
  Grounding resistance measurement by Earth Resistance Tester Clamp type.
- Quick Alarm and Real Time Alert.
  Real Time detection of Grounding Resistance.
- Reduce the cost and Increase the efficiency of operation.
  Real Time Monitor by Grounding Resistance detection.
- Having proper grounding and checking it regularly is very important.
  A ground in proper condition ensures protection against voltage surges.

Remote Ground Monitoring System

Stainless steel enclosure
Master unit
KIGM-GLX (Master Unit)

Plastic enclosure
KIGM-GLXP (Master Unit)

Real-Time Meter

Code No.	Diameter (mm) L	W	H	Weight (kg)
KIGM-GLX	500	400	250	20.5
KIGM-GLXP	500	400	200	9.5

Meter System

- Grounding resistance real time data and resistance alarm trigger sent to user by mobile phone SMS.
- Multi points to Multi users (10 points to 10 users for one main remote terminal unit).
- Communication protocol Modbus RTU /RS 485 port.
- Stainless steel enclosure (IP55) with good seal for severe environment service.
- GPRS/internet/WAN/LAN can be provided and customized (option).

AREA Application

- Oil & Gas Plant
- Transmission Line
- Meteorology Station
- Petrochemical Plant
- Satellite & Microwave Station
- Mining
- Tank Farm
- Power Plant
- Distribution Line
- Data Center Grounding

Master Unit

RTU specification

Meters interface protocol	: Modbus RTU / RS 485
No. of Meters for one RTU	: 10 sets
Remote communication	: - Remote terminal unit GSM/GPRS sent to mobile phone SMS - Remote setting and command by SMS available
No. of remote users	: 10 users (registered mobile phone number)

Real-Time Meter Specification

Function	Return circuit (loop) ground resistance, metallic return connection resistance
Resistance Range	0.01Ω -200Ω ,Resolution : 0.001Ω
Accuracy	2% Reading, 3 digits
Alarm Setting Value Range	0.01Ω -200Ω ,Detection panel setting
Display Mode	4 digits LCD direct indication
Single Measurement of	0.5 second

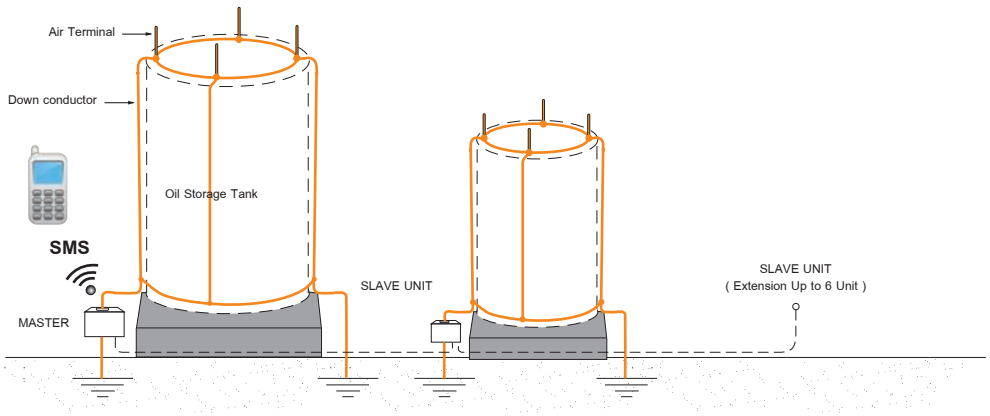

Remote Ground Monitoring System

Stainless steel enclosure
Slave unit
KIGM-G1 (Slave Unit)

Plastic enclosure
KIGM-G1P (Slave Unit)

Real-Time Meter

Code No.	Diameter (mm) L	W	H	Weight (kg)
KIGM-G1	200	300	250	5.0
KIGM-G1P	350	250	180	3.0

System Feature

- Non-contact measurement, safe and reliability, ease of installation. Grounding down lead is directly through the detector perforation, will not affect lightning protection grounding effect and the normal operation off the facilities.
- Allocating display screen and alarming light may show at any time to observe the grounding resistance value. We can set the alarm value; alarm light is flashing when the measured value is beyond pre-set critical value.
- Providing RS 485/Modbus protocol for external out-put data interface.

Benefits

Grounding resistance value change can be harmful effect to safety and malfunction of the plant or equipment also grounding conductor lost by the thief. All can be provided by “KIGM-G1”

AREA Application

- Oil & Gas Plant
- Transmission Line
- Meteorology Station
- Petrochemical Plant
- Satellite & Microwave Station
- Mining
- Tank Farm
- Power Plant
- Distribution Line
- Data Center Grounding

Slave Unit Specification

Real-Time Meter Specification

Function	Return circuit (loop) ground resistance, metallic return connection resistance
Resistance Range	0.01Ω -200Ω ,Resolution : 0.001Ω
Accuracy	2% Reading, 3 digits
Alarm Setting Value Range	0.01Ω -200Ω ,Detection panel setting
Display Mode	4 digits LCD direct indication
Single Measurement of	0.5 second

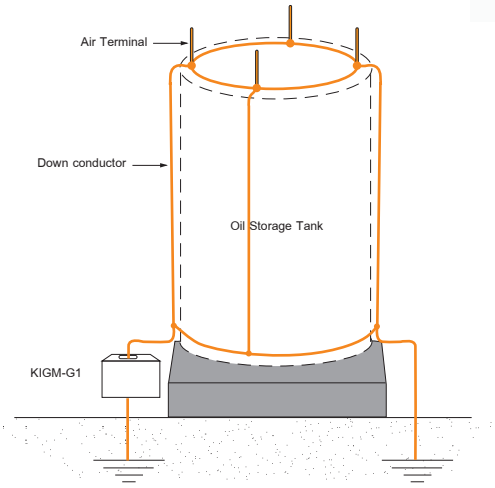

Grounding Resistance Online Meter

Grounding Resistance Online Meter KIGM-G2

Real-Time Meter

Code No.	Dimentions (mm) L	W	H	Weight (kg)
KIGM-G2	400	250	400	6.0

Grounding Resistance Online Meter increases reliability of grounding system by Real-Time grounding resistance detection and sends resistance data via RS 485/Modbus protocol for external out-put data interface.

When grounding resistance value is changed. It may be due to grounding loss. It can be harmful effect to safety and malfunction of the plant or equipment. Also grounding conductor may be lost by the thief. All can be provided by Grounding Resistance Online Meter KIGM-G2. It is measuring return circuit resistance, Non-contact measurement, safe and reliability and ease of installation.

Feature :

- Real Time Detection of grounding conductor.
- Online Monitoring of grounding resistance.
- LCD display screen, light and sound alarm.
- Providing RS 485 communication protocol for external out-put data interface.

Technical Data

Function	Return circuit (loop) grounding resistance, metallic return connection resistance
Power Supply	DC6 V~DC9V
Resistance Range	0.01Ω -200Ω ,Resolution : 0.001Ω
Accuracy	2% Reading, 3 digits
Alarm Setting Value Range	0.01Ω -200Ω ,Detection panel setting
Single Measurement of Time	0.5 second
Alarm Setting	Meter panel setting
Data Display	4 digits LCD direct indication
Protocol Standard	RS485 standard MODBUS-RTU communication
Power Supply Mode	External power supply

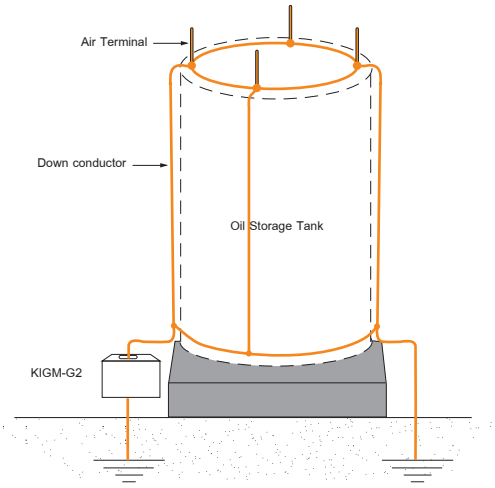

References

Owner	Project Name	Distributor	Period
Thailand	● South Bangkok Combined Cycle Power Plant	Sino - Thai Engineering & Construction Co.,Ltd	2009
	● 500 Kv Gis At On Nuch Substation Under Bluk Power Supply For The Greater Bangkok Area Phase 2	Sri-u-thong Co.,Ltd.	2009
	● Mitr Phuluang Sugar Mils At Loei	K.M.L. International Co.,Ltd	2012
	● Belle Condominium	K.M.L. International Co.,Ltd	2012
	● Chana Power Plant	K.M.L. International Co.,Ltd	2012
	● Wangnoi Power Plant	K.M.L. International Co.,Ltd	2012
	● Lopburi Solar Power Plant	K.M.L. International Co.,Ltd	2012
	● Tot 3 G	K.M.L. International Co.,Ltd	2012
	● Bang Pa - In Power Plant	K.M.L. International Co.,Ltd	2012
	● Nongsang Power Plant	K.M.L. International Co.,Ltd	2012
	● Central Plaza Suratthani	K.M.L. International Co.,Ltd	2012
	● Amata B - Grimm At Rayong	K.M.L. International Co.,Ltd	2012
	● Boonthavorn Rama Ii	K.M.L. International Co.,Ltd	2012
	● Solar Thermal Power Plant At Kanchanaburi	K.M.L. International Co.,Ltd	2012
	● Hatyai Submarine Cable	K.M.L. International Co.,Ltd	2012
	● 115 Kv Bang Pa - In 2 - Ayutthaya 1	K.M.L. International Co.,Ltd	2012
	● P/j The Siam On The River Hotel	K.M.L. International Co.,Ltd	2012
	● 115 Kv, Xekong Ss&xekhamane3 - Xekong Tl, Laos	K.M.L. International Co.,Ltd	2012
	● Bang Pa - In Solar Plant	K.M.L. International Co.,Ltd	2012
	● Ubonratchathani Bioeternal Substation	K.M.L. International Co.,Ltd	2012
	● The International Convention And Exhibition Center Commemorating His Majesty's 7 Ht Cycle Birthday Anniversary	K.M.L. International Co.,Ltd	2012
	● Central Rama 9	K.M.L. International Co.,Ltd	2012
	● Central Festival Samul	Elmec Engineering Co.,Ltd	2013
	● S One Perspective Department Store At Kadrincome	Precise Corporation Co.,Ltd	2013
	● Boonthavorn Rama 2	Secco Co.,Ltd	2013
	● Mrta Purple Line	Sino - Thai Engineering & Construction Co.,Ltd	2013
	● Central Hatyai Project	205 Engineering Co.,Ltd	2013
	● Phuket Airport Deverlopment Project	Sino - Thai Engineering & Construction Co.,Ltd	2013
	● Solar Power Plant Nakhonsawan	Aod Supply Co.,Ltd	2013
	● Nong Sang Power Plant Nakhonsawan	Sino - Thai Engineering & Construction Co.,Ltd	2013
	● Kanom Power Substation	Siemens Co.,Ltd	2013
	● Tesco Lotus Rdc	Prosper Engineering Co.,Ltd	2013
	● Bts Bangwa Station	Suvis Co.,Ltdsiemens Co.,Ltd	2013
	● Chana Power Plant Development	Siemens Co.,Ltd	2013

Remark : The aforementioned project is some of the domestic project references

References

Owner	Project Name	Distributor	Period
EGAT	● Lam Takong Wind Turbine Generation	Hydrochina Corporation	2017
	● 230 Kv Ayutthaya 4 - Sikhiu 2	C.H.C. Engineering	2017
	● 230kv Mae Moh, Pha Yao	Globaltronic Intertrade Co., Ltd.	2017
	● 500kv Tha Tako Substation Expansion	Sri U-thong Co., Ltd.	2017
	● Mae Moh Generation Plant	Globaltronic Intertrade Co., Ltd.	2017
	● Transmission Lines 115 Kv Nakhon Phanom - Sakon Nakhon 2	Sri U-thong	2017
	● Transmission Lines115 Kv Amnat Charoen Mukdahan	Sri U-thong	2017
	● 115kv Substation Lan Krabu - Phisanulok	Loxley Power System Co., Ltd.	2017
	● Transmission System Expansion And Renovation Projcet Phase 2	Kinden	2017
	● Fire Protection System Phase 3	Kinden	2017
	● T2 Wind Farm	Italthai Engineering	2017
	● T3 Wind Farm	Italthai Engineering	2017
	● Solar Farm	Tns Instrument And Engineering Co., Ltd.	2017
Ramathibodi Hospital	● Ramathibodi Hospital Rama 6 Building	P. S. Power Lines Company Limited	2017
Genesis	● Genesis Data Center	Prosper Engineering	2017
PTT	● Ptt Khao Hin Son, Chachoeng Sao	Rk3 Engineering & Development	2017
	● Ptt Lng	Royaltec International	2017
Cambodia	● Celti 150mw Coal Power Plant, Si Hanoukville	Globaltronic Intertrade	2017
AOT	● Suvarnapbhumi Airport	Italian-thai Development	2017
EGCO	● Rayong Generation Plant, Amata City	Globaltronic Intertrade	2017
Malaysia	● Scc Rapid (Petronas)	Royaltec International	2017
PEA	● 8.965mw Vspp-pea	Italthai Engineering	2017
	● Bang Phai Substation	Royaltec International	2017
	● Lamphun Substation, Northern Region Industrial Estate	Interlink Communication Public Co., Ltd.	2017
	● 115kv Tranmission Line Mae Hon Son	Eastern Technical Engineering Public Company Limited	2017
Sea Gate	● Siri Plaza	Aka Co., Ltd.	2017
IDEO Ananda Development	● Ideo 02 Bang Na	N.R.Engineering Co., Ltd.	2017
Central	● Central Festival Phuket	Power Line Engineering Public Company Limited	2017
	● Central Mahachai	Elmech Engineering Co., Ltd.	2017
	● Central Nakhon Ratchasima	Inwire Engineering Company Limited	2017
Chulalongkorn University	● Cu Centennial Park	Syntec Construction Public Company Limited	2017
Makro	● Makro Pathumthani	Entecon Company Limited	2017
	● Makro Kalasin	Entecon Company Limited	2017
Thai Government	● Paliament House Of Thailand	Power Line Engineering Public Company Limited	2017
	● Thai Supreme Court Building	Power Line Engineering Public Company Limited	2017
	● Office Of Court Of Justice	Power Line Engineering Public Company Limited	2017
Royal Thai Navy	● Royal Thai Navy Armory	Winning System Engineering Limited Partnership	2017
Mass Rapid Transit Authority of Thailand	● Mrt Blue Line	Sino-thai Engineering & Construction Public Company Limited	2017 2017
	● Mrt Green Line	Power Line Engineering Public Company Limited	2017
	● Mrt Red Line	Italian-thai Development	2017
Charoen Pokphand	● Cp Ram Khon Khen	Christiani & Nielsen (Thai) Public Company Limited	2017
Department of Highways	● Motorway Chonburi	Entecon Company Limited	2017
MQDC	● Whizdom Condo Sukhumvit 101	Tri-en Solution Co., Ltd.	2017
Royal Thai Army	● โครงการพัฒนาและปรับปรุงกองบัญชาการกองทัพไทย (แจ้งวัฒนะงานปรับปรุงระบบป้องกันฟ้าผ่า อาคารหมายเลข ๑ บก.ทท.)	Gentrade Engineering Co., Ltd.	2017
Myanmar	● Minjar Power Plant	Demco Public Company Ltd.	2017

Remark : The aforementioned project is some of the domestic project references

References

Owner	Project Name	Distributor	Period
Boonthavorn	● Boonthavorn Udon Thani	Boonthavorn Development Co., Ltd.	2017
Tesco Lotus	● Tesco Lotus Fang District	Thanacha Co., Ltd.	2017
	● Tesco Lotus Prakhon Chai District	Prosper Engineering	2017
IKEA	● Ikea Bang Yai	Thai Semcon Co., Ltd.	2017
MEA	● Mea Feeder Remote Terminal Unit (Frtu)	Precise Electro-mechanical Works Co., Ltd.	2017
	● Substation Prawet	Sb Powertech Co., Ltd.	2017
	● Substation Pra Nakorn Tai	Transec Power Services Co., Ltd.	2017
	● Substation Prachachun	Klang Faifa Rog-ngan Co., Ltd.	2017
CP ALL	● Cp All Buriram	Royaltec International	2017
ENSYS	● Biomass Power Plant Ensys	N.R.Engineering Co., Ltd.	2017
PEA	● 115kv Transmission Line Rojana, Ayutthaya	Rss 2016 Co., Ltd.	2017
Supalai	● Supalai Elite Surawong	Secco Engineering & Construction Co.,Ltd.	2017
	● Supalai Elite Phayathai	Secco Engineering & Construction Co.,Ltd.	2017
	● Supalai Veranda Ratchavipha	Secco Engineering & Construction Co.,Ltd.	2017
	● Supalai Wellington 2	Secco Engineering & Construction Co.,Ltd.	2017
	● Supalai Loft Chaeng Watthana	Secco Engineering & Construction Co.,Ltd.	2017
	● Supalai Elite Phayathai	Secco Engineering & Construction Co.,Ltd.	2017
TESCO LOTUS	● โลตัส กุฉินารายณ์ จ.กาฬสินธุ์ Tesco Lotus Kuchinarai	Prosper Engineering	2017
B.Grimm Power	● 115 Terminal Sub Abpr5	Demco Public Company Ltd.	2017
PEA	● สถานีไฟฟ้าพัทยากลาง Central Pattaya Substation	Secco H.V. Co Ltd	2017
	● 115kv Khao Mai Kaeo, Chonburi	Demco Public Company Ltd.	2017
TFG	● Tfg-further Product Factory	V Neramit Co., Ltd.	2017
JWS Construction	● The Garden 9 (Lat Krabang)	V Neramit Co., Ltd.	2017
มหาวิทยาลัยแม่ฟ้าหลวง จังหวัดเชียงราย	● Mae Fah Luang University	Vars Co., Ltd.	2017
	● Bang Kruai Hospital 2	Royaltec International	2017
	● Gymnasium Chitralada School	Italthai Engineering Co., Ltd.	2017
Platinum Market	● The Market By Platinum	First Technology Co., Ltd.	2017
Vietnam	● Thai Binh 1 Thermal Power Plant	Globaltronic Intertrade	2017
AP (THAILAND)	● Aspire Sathorn-ratchapruek	Tri-en Solution Co., Ltd.	2017
	● Aspire Erawan	Prosper Engineering	2017
TAKATA	● Takata Industrial Plant	Bania Engineering Co., Ltd.	2017
Laos	● Hydroelectric Power Nam Ngiep	R C R Co., Ltd.	2017
	● The Saint Residences Vibhavadi Rangsit	Secco Engineering & Construction Co.,Ltd.	2017
เกษมทรัพย์สิริ 2	● Aec Market Building	Power Line Engineering Public Company Limited	2017
EGAT	● 500 Kv Chaeng Watthana Substation	Demco Public Company Ltd.	2017
	● 500 Kv Transmission Line Chaiyapoom	Demco Public Company Ltd.	2017
Phuket Sirinath Property	● The Terminal Phuket	Engnue Technology Co., Ltd.	2017
EGAT	● Supply Grounding Material	Kumwell	2018
	● Transmission Lines 230kV Chachoengsao 2 - Prachinburi 2	Demco Public Company Limited	2018
	● Transmission Lines 550kV Bang Saphan 2 - Surat Thani 2	Kalpataru Limited	2018
	● Underground Transmission Line 230kV South Bangkok	TEDA Company Limited	2018
	● Transmission Lines 500kV Bang Saphan 2 - Surat Thani 2	Larsen & Toubro Limited	2018
	● 230/115 kV Ao Phai Substation (GIS)	Sinohydro (Thailand) Co., Ltd.	2018
	● Transmission Lines 500kV Ubon Ratchathani 3 - Roi Et 2	RCR	2018
	● Transmission Lines 500kV Bang Saphan 2 - Surat Thani 2	Loxley Public Company Limited	2018
	● Supply of Miscellaneous Equipment Bulk Power Sopply for the Greater Bangkok and Vicinity Area Phase 3	Maclean - Dulhunty Power (Thailand) Limited	2018

Remark : The aforementioned project is some of the domestic project references

References

Owner	Project Name	Distributor	Period
EGAT	● 115 kV Phatthalung Substation (GIS)	Italthai Engineering Co., Ltd.	2018
	● South Bangkok Power Plant	Marubeni Corporation	2018
PEA	● Substation Phuket	Siemens	2018
	● 115 kV Substation Songkhla	IGEN Engineering	2018
	● 115/33 kV Hanuman Wind Farm	ABB	2018
	● Sikhiu 3&5 Wind Farm Substation	Grid Solution	2018
GULF	● Gulf Sriracha Substation	Mitsubishi Electric Asia	2019
EGAT	● 500 KV Surat Thani Substation	Larsen &Toubro Limited	2019
	● 230 KV Ao Phai Substation	Sino Hydro	2019
	● Bangpakong Power Plant	Royaltech International	2019
	● 230 KV Khlong Dan Substation	Larsen &Toubro Limited	2019
	● 500 KV Pluak Daeng Substation	KEC International Limited	2019
SRT	● Bangsue – Rangsit Redline	Italianthai Development	2019
	● Red Line Grand Station	Unique Engineering	2019
MRTA	● Orange Line	Italthai Engineering	2019
	● Green Line	Italianthai Development	2019
ICON SIAM	● Gold Line	Italianthai Development	2019
AOT	● Suvarnabhumi Airport Phase2	Power Line Engineering	2019
AEROTHAI	● VOR / DME Betong Airport	Pornpian Co., Ltd	2019
EGAT	● 500 KV Bang Saphan2 – Surat Thani 2	Uanpataru Power Transmission	2019
	● 230 KV Chatuchak	Globaltronic Intertrade Co.,Ltd.	2019
PEA	● 115KV สฟ. อรัญประเทศ	Demco Public Company Limited	2019
	● สถานีไฟฟ้า คลองเขื่อน	U Services	2019
MEA	● สย. คอต่อ & สย.แพรกษา	TEDA Co., Ltd	2019
	● Chandrakasem, SuanSom, Rungpracha Substation	Siemens	2019
EGAT	● EGAT: Saraburi 6 Substation	Italthai Engineering	2019
	● EGAT: 115 KV Khon-Khaen	Italthai Engineering	2019
	● EGAT: Phuket Substation	Italianthai Development	2019
PEA	● LPWP 8.965 Mw (โครงการนาลมลิกอร์)	Italthai Engineering	2019
	● 115 / 22 KV Gis Substation	ABB	2019
SUPALAI	● Varenda Phasicharoen	Secco	2019
	● Oriental Sukhumvit 39	Secco	2019
	● Riva Grand	Secco	2019
โรงพยาบาลจุฬาลงกรณ์	● อาคาร ภปร.	Quesco	2019
NARAI PROPERTY	● Park Land จรัญ-ปิ่นเกล้า	Secco	2019
CP	● CP Tower 2	Syntec	2019
SIGHA	● Sigha Complex	Secco	2019
THAI OIL	● Main Building Sriracha	Prosper Engineering	2019

Remark : The aforementioned project is some of the domestic project references

References

Owner	Project Name	Distributor	Period
OMAN	● Al Kamil Power Plant	Gulf Radiant Electrical & Trading L.L.C.	2001 - 2002
U.A.E	● Dewa Project	Gulf Radiant Electrical & Trading L.L.C.	2001 - 2002
	● Adwea Project	Gulf Radiant Electrical & Trading L.L.C.	2001 - 2002
INDIA	● Purula-hydro Power Plant	Taisei Corporation	2003
QATAR	● Qatar Petroleum Gas	Gulf Radiant Electrical & Trading L.L.C.	2003
SUDAN	● Melut Basin Oil	Gulf Radiant Electrical & Trading L.L.C.	2003
INDIA	● Purula-hydro Power Plant	Taisei Corporation	2003 - 2004
VIETNAM	● Binh Trieu-hcm 110KV, Phu Tho-hcm 110KV	V.T.E.C.H. Electrical Technology Co.,Ltd.	2004
CHINA	● Shanghai Power Plant	Nova Technology Co.,Ltd.	2004
PAKISTAN	● Lpg Extraction Plant	ABB PVT.Ltd	2004
	● 500KV/220 Ntoc-kekc	Pacific Engineering Co.,Ltd.	2005
MALAYSIA	● 500KV T/l Transmission Lines For 1400mw Jimah Power Project	Fujikura Ltd.	2005
LAOS	● Nam Theun 2 Hydro Power Project Em2 Transmission Line	J-Power System Corporation	2005
VIETNAM	● Cu Mau Combine Cycle Power Plant Petro	V.T.E.C.H. Electrical Technology Co.,Ltd.	2006 - 2007
CHINA	● Shantou 500KV Substation	Nova Technology Co.,Ltd.	2007
	● Shi Hua Yang Zhuang River Project	Nova Technology Co.,Ltd.	2008
MALAYSIA	● Hospital Petronas (Klcc Health Care Center)	Hellerman Letrik Sdn. Bhd.	2008
	● Kuala Lumpur International Airport (Klia)	Hellerman Letrik Sdn. Bhd.	2008
	● Cu Mau Combine Cycle Power Plant Petro	Hellerman Letrik Sdn. Bhd.	2008
	● Maxis Telecom Malaysia	Hellerman Letrik Sdn. Bhd.	2008
PAKISTAN	● Gas Turbine Power Plant	Pacific Engineering Co.,Ltd.	2008
U.A.E	● Dewa-d.f.o. Pipeline	Gulf Radiant Electrical & Trading L.L.C.	2009
	● Abu-dhabi International Airport 2k Runway Project	Gulf Radiant Electrical & Trading L.L.C.	2009
	● Du Telecom Tower Civil Works	Gulf Radiant Electrical & Trading L.L.C.	2009
EGYPT	● Ezz-steel Plant, Suez	DANIELI	2009
IRAQ	● Us Army Jlsc-doha, Project Iraq/afghanistan	Gulf Radiant Electrical & Trading L.L.C.	2009
	● Pier & Seawall Project, Umm Qasr, Basra-iraq	CCI Inc.	2009
VIETNAM	● Main Gas Filling Station	V.T.E.C.H. Electrical Technology Co.,Ltd.	2009
CHINA	● Yinnan Province Xiao Wan Hydro-power Plant	Nova Technology Co.,Ltd.	2009
	● Shangdong Province Dezhou 500 KV Substation	Nova Technology Co.,Ltd.	2009
INDONESIA	● Sengkang		2008
TRINIDAD AND TOBAGO	● Brechin Castle Substation	Petrotrin, Petroleum Company of Trinidad and Tobago Limited.	2010
	● EPC Refinery Substation Project : 2312	Petrotrin, Petroleum Company of Trinidad and Tobago Limited.	2010
VIETNAM	● Da Nang Internation Airport-danang City	CNA-HTE / Middle Airports Corporation-MAC	2010
COLOMBIA	● Santa Marta Substation Project 2365	HMV Ingenieros Ltda	2010
	● LLC Barrancabermeja-el Centro, Oil Industrial Complex	Occidental De Colombia Inc.	2010 - 2013
INDONESIA	● Tanjung Tabalong		2011
COLOMBIA	● Pacific Rubiales Corporation Oil Industrial Complax.	CAM Colombia (Compania Americana De Multiservicios)	2011 - 2012
VENEZUELA	● Tocoma Hidroelectric Project (2000 Mva) Rio Caroni Pto. Ordaz	Consorcio Oiv Tocoma Odebrecht - Imoregilo - Vincler	2011 - 2013
INDONESIA	● KDL 120mw Combined Cycle Power Plant Project	Kratatau Daya Listrik	2013
LAO PDR	● Nong Deun - Seno - Meuang Phine 115KV Transmission Project	China-East Resources Import & Export Co.	2014 - 2016
	● Xayaburi Hydroelectric Power Project : Package 4 : 500KV Transmission Line	China-East Resources Import & Export Co.	2014 - 2016
SINGAPORE	● Exxon	Alstom Grid Pte Ltd (Singapore)	2016

Remark : The aforementioned project is some of the international project references

References

Owner	Project Name	Distributor	Period
MYANMAR	● Ese Project	Arkarthit Enterprise Co.,Ltd.	2014 - 2016
	● Mepe Project	Arkarthit Enterprise Co.,Ltd.	2014 - 2016
	● 66KV Kyaukphyu Substation Switchbay	Arkarthit Enterprise Co.,Ltd.	2015
	● 66/11KV, 10 Mva Kyaukkayate Substation	Arkarthit Enterprise Co.,Ltd.	2015
	● 230KV Switchbay Extension At Thaketa Substation	Arkarthit Enterprise Co.,Ltd.	2015
	● 66/11KV, 5 Mva Shardaw Substation	Arkarthit Enterprise Co.,Ltd.	2015
	● 66KV Moegoke Ss Switchbay	Arkarthit Enterprise Co.,Ltd.	2015
	● Mandalay Project	Arkarthit Enterprise Co.,Ltd.	2016
	● Mawlamying Ss Extention	Arkarthit Enterprise Co.,Ltd.	2016
	● 43T / MEPE (PTP)	Arkarthit Enterprise Co.,Ltd.	2016
	● New Life Myanmar Hotel Project	Arkarthit Enterprise Co.,Ltd.	2016
BANGLADESH	● 230 KV Extension In Existing 230/132 Kv Substation At Khulna South On Turnkey Basis	N.R. Engineering Co.,Ltd.	2016
LAO PDR	● Xe Namnoy And Xe Katam Hydropower Project	B.Grimm Power Public Company Limited	2016
INDONESIA	● Jawa 2 Coal Fired Power Plant	PT. Promindo	2016
	● Kalsel-1 Coal Fired Power Plant	PT. Raj Prima	2016
PAKISTAN	● K Electric Rehabilation (Tp100 Project)	Siemens	2016
	● PABCL Project	Descon	2016
VIETNAM	● Ha Noi Metro Project	V.T.E.C.H. Electrical Technology Co.,Ltd.	2015
	● Nghi Son Refinery Project	V.T.E.C.H. Electrical Technology Co.,Ltd.	2015-2016
	● Npk Phu My Power Plant Project	V.T.E.C.H. Electrical Technology Co.,Ltd.	2016
	● Nestle Hung Yen Project	V.T.E.C.H. Electrical Technology Co.,Ltd.	2016
	● Thai Binh 1 Thermal Power Plant	V.T.E.C.H. Electrical Technology Co.,Ltd.	2016
	● "Ground Improvement : 220kV & 500kV Transmission Tower of PTC1 & PTC2"	V.T.E.C.H. Electrical Technology Co., Ltd.	2016-2017
	● Metro Linie Nhon - Ha Noi Station	V.T.E.C.H. Electrical Technology Co., Ltd.	2017
INDONESIA	● Lumut Balai Geo Thermal	PT.Raj Prima	2017
	● Solar Photovoltaic Electricit	PT.Raj Prima	2017
	● 150kV Bekasi Substation	PT.Raj Prima	2017
	● Tangguh Expension Project	PT.Raj Prima	2017
	● Petrokimia Butadiene Indonesia Extraction Plant	PT.Raj Prima	2017
	● 150kV BSD Substation	PT.Raj Prima	2017
	● 150kV Pasar Kermis Substation	PT.Raj Prima	2017
	● PLTMG Package 4 Project	PT.Raj Prima	2017
	● Kalsel 1- CFPP Project Power Plant	PT.Raj Prima	2017
	● MRT Jakarta Project	PT.Raj Prima	2017
	● PLTMG Package 3 Project	PT.Raj Prima	2017
	● Lumut Balai Geo Thermal - 2nd MTO	PT.Raj Prima	2017
MYANMAR	● 51T / MEPE (PTP) - AMM	Arkarthit Enterprise Co., Ltd.	2017
	● Boxpak Factory Project - CAM	Arkarthit Enterprise Co., Ltd.	2017
	● Shan State Project - MPD	Arkarthit Enterprise Co., Ltd.	2017
MALAYSIA	● Muram to Samalaju 2 - 275kV Transmission Line Project - SEB	KEC Internation Limited	2017
BANGLADESH	● 230/132kV GIS Dhamrai - Shampur PGCG	Siemens Limited	2017
DUBAI, UAE	● TAKREER ADH	Gulf Radiant Electrical & Trading L.L.C.	2017
VIETNAM	● COCOBAY	V.T.E.C.H. Electrical Technology Co., Ltd.	2017
	● Cam Ranh International Airport	V.T.E.C.H. Electrical Technology Co., Ltd.	2017
	● THE ESTELLA HEIGHTS - PHASE 2	V.T.E.C.H. Electrical Technology Co., Ltd.	2017-2018
PAKISTAN	● Zorlu OFS T-3428	Siemens Pakistan Engineering Co., Ltd.	2017-2018

Remark : The aforementioned project is some of the international project references

References

Owner	Project Name	Distributor	Period
PAKISTAN	● KETP 1000	Siemens Pakistan Engineering Co., Ltd.	2017-2018
	● DABS 010	Siemens Pakistan Engineering Co., Ltd.	2017-2018
	● CEL - Chanar	Siemens Pakistan Engineering Co., Ltd.	2017-2018
VIETNAM	● FIRST SOLAR - PHASE 2	V.T.E.C.H. Electrical Technology Co., Ltd.	2017-2018
	● METRO LINE BEN THANH - SUOI TIEN	V.T.E.C.H. Electrical Technology Co., Ltd.	2017-2018
	● RIVIERA POINT - PHASE 1B	V.T.E.C.H. Electrical Technology Co., Ltd.	2017-2018
	● Vinh Tan 4 Thermal Power Plant	V.T.E.C.H. Electrical Technology Co., Ltd.	2018
	● Heineken Vietnam Brewery - Da Nang	V.T.E.C.H. Electrical Technology Co., Ltd.	2018
	● Long Phu 1Thermal Power Plant - OUTDOOR BAY	V.T.E.C.H. Electrical Technology Co., Ltd.	2018
	● LDS System Renting Service for PTC1	V.T.E.C.H. Electrical Technology Co., Ltd.	2018
INDONESIA	● KALSELTENG-2 COAL FIRED STEAM POWER PLANT	PT.Raj Prima	2018
	● CAP NPE	PT.Raj Prima	2018
	● 500kV Delta Mas Substation	PT.Raj Prima	2018
	● 150kV Sinar Sahabat Substation	PT.Raj Prima	2018
	● 150kV Pandaan Baru Substation	PT.Raj Prima	2018
	● 150kV Sukatani Extension Substation	PT.Raj Prima	2018
	● 150kV Nganjuk II Substation	PT.Raj Prima	2018
	● PLTMG Package 3 Project - Extension	PT.Raj Prima	2018
	● PLTMG Package 4 Project - Extension	PT.Raj Prima	2018
MYANMAR	● 46T/MEPE (PTP) - FSI	Arkarthit Enterprise Co., Ltd.	2018
	● Private Project - CAM	Arkarthit Enterprise Co., Ltd.	2018
	● LV-047 LP2 PROJECT - CAM	Arkarthit Enterprise Co., Ltd.	2018
	● EE-032 PROJECT - CAM	Arkarthit Enterprise Co., Ltd.	2018
	● Nestle Factory Project - KKST	Arkarthit Enterprise Co., Ltd.	2018
	● YGN-MDY Railways Improvement Project - BFE	Arkarthit Enterprise Co., Ltd.	2018
	● 43T/MEPE (PTP)_Mawlamying SS Extension - MPS	Arkarthit Enterprise Co., Ltd.	2018
	● Thilawa Project - KST	Arkarthit Enterprise Co., Ltd.	2018
	● Myanmar Beer Factory Project - PKM	Arkarthit Enterprise Co., Ltd.	2018
	● EAC Soft Drink Factory Project - ERC	Arkarthit Enterprise Co., Ltd.	2018
BANGLADESH	● Augmentation & Rehabilitation of 33KV GIS Switchgears at Tongi 230/132/33KV Grid Sub-Station	Siemens Bangladesh Ltd.	2019
PAKISTAN	● Naveena Steel Mills Project	Pacific Engineering	2019-2020
	● Sahiwal 220kV Grid Stations	Pacific Engineering	2019-2020
	● Sahiwal 500kV Grid Stations	Pacific Engineering	2019-2020
INDONESIA	● MULTIFAB GI 150kV AMPEL	PT. RAJ Prima	2019
	● IKPT-AYNI005 NSI i-III	PT. RAJ Prima	2019
	● GI MUARA WAHAU	PT. RAJ Prima	2019
	● Muara Karang Power Station	PT. RAJ Prima	2019
	● MULTIFAB GI 150kV ULEE KARENG	PT. RAJ Prima	2020
PHILIPPINE	● BESS PHILIPPINES (1)	PT. RAJ Prima	2020
MYANMAR	● 66kV Kalewa-Mawleik TL/18-19 (16.7 Miles) -ZLE	Arkarthit Enterprise Co.,Ltd.	2018-2019
	● Private Project/19-20 - TTM	Arkarthit Enterprise Co.,Ltd.	2019-2020
	● Private Project/2019-20-ERL	Arkarthit Enterprise Co.,Ltd.	2019-2020
	● PTTEP Myanmar Project/2019-20 - OSES	Arkarthit Enterprise Co.,Ltd.	2019-2020
	● Makro Myanmar Project 19-20 -NLM	Arkarthit Enterprise Co.,Ltd.	2019-2020
	● Peninsula Hotel Yangon Project/2019-2020	Arkarthit Enterprise Co.,Ltd.	2019-2020
DUBAI	● DEWA 132/11kV Substation	Gulf Radiant Electrical & Trading LLC	2020
	● DEWA IV 700MW CSP	Gulf Radiant Electrical & Trading LLC	2019-2020

Remark : The aforementioned project is some of the international project references

CHINA : 6100 MW YANGJIAN NUCLEAR POWER PLANT

DUBAI : BARZAN ONSHORE FACILITIES PROJECT IN RAS LAFFAN, QATAR

VENEZUELA : TOCOMA HIDROELECTRIC PROJECT (2000 MVA) RIO CARONI PTO. ORDAZ

THAILAND : PTT GASSEPARATION PLANT

COLOMBIA : CENTRAL 20MW EPM-EPC SE MALENA SUBSTATION 230 kV

MALAYSIA : KUALA LUMPER INTERNATIONAL AIRPORT - KLIA (MALAYSIA)

VIETNAM : 500KV TAN DINH - SONG MAY POWER LINE

INDIA : INDIA RAILWAYS

THAILAND : 230/500kV, PLUAK DAENG ELECTRICITY GENERATING AUTHORITY OF THAILAND, (EGAT)

CHINA : HIGH SPEED TRAIN

Index

Accessories Adhesive 67
Adhesive Base 65
Adjustable Saddle 53
Air terminal Bracket 50
Annealed Copper - Clad Steel Wire 82
Anti - Vandal Down Conductor Guard 73
Back Holdfast 60
Back Plate Holdfast 59
Beam Clamp 60
Bi - Metallic Connector 59
Blunt End Air Terminals 46, 49
Blunt End Air Terminal (Height ≥1.5 m.) 47
Cable Cross Clamp 55
Cable Grid 31
Cable Support 55
Cable - Tape Test Connector 58
Cable Test Connector 55
Cable to Tape 56
Circular Conductors 79-80
Circular Conductors Holders 65
Clamp A Cable to Flat Bar 29
Clamp Two Cable to Flat Bar 29
Concrete Inspection Pit 40-41
Conductor to Rebar Clamp 61
Conductor Bender 81
Conductor Straightener 81
Conductor Straightener with electric drive 81
Connector Screw Type 33
Copper - bonded Ground Rod - Standard series 9-11
Copper - bonded Ground Rod - Thread series 12-14
Copper C-Clamp 91-92
Copper Earthing Electrode Water Sealing Glands 42
Copper Lugs 90

Index

Copper Lugs - 1-Hole 84
Copper Lugs - 2-Hole 86
Copper Lugs - 4-Hole 89
Copper Lug for Exothermic Welding 68
Copper Lugs One-Hole Long Barrel 90° Pad 87
Copper Lugs Two-Hole Long Barrel 90° Pad 88
Coupling 15
Coupling for Solid Copper / Stainless Steel Ground Rod 17
Cross Cable Saddle 53
Domestic Project Reference 101-104
Double Base Saddle 52
Driving Head 15
Driving Head for Solid Copper / Stainless Steel Ground Rod 17
Earth Boss 33
Earth Point 32
Electrolytic Grounding - KEG 19
Elevation Terminals for Blunt End Air Terminal 49
Expansion Braid Bond 34
Eye Bolt 33
Flat Saddle 52
Flexible Copper Braid Bond 34
Floor Saddle 54
FRP Inspection Pit 43
Ground Bar 36-39
Ground Bar Pit 42
Ground Clamp 31
Grounding Resistance Online Meter 100
Ground Plate - Copper - Bonded Steel 20
Ground Plate - Lattice Copper 20
Ground Plate - Solid Copper 20
Ground Rod Driving Hammer 18
Ground Rod Electric Driving Hammer 18
Ground Rod Seal 43

Index

Ground Rod - Solid Copper / Stainless Steel 16

Grounding Test Box 35

High Voltage Insulating Down Conductor Cable (KHV) 83

Hydraulic Crimping Tool 93

Insulating Cable (KIC) 83

Insulator Support 66

International Project Reference 105-108

Introduction to Conductor 74-75

Introduction to Innovation 94-96

Introduction to Lightning Rod 1-8

Introduction to Metal Sheet Clamp 71

Introduction to More Effective Grounding - MEG 22-23

Lightning Pole 69

Metal Sheet Clamp 72

More Effective Grounding - MEG 24

Multi Point Air Terminals 48

Non Metallic Dc Clips 65

One Cable to Pipe Clamp 30

One Hole Cable Grip 56

Pipe Bond Clamp 30

Pipe to Cable Clamp 28

Puddle Flange 50

Pyramid Holdfast 66

Q-Connector 63

Remote Ground Monitoring System 97-99

Ridge Saddle 52

Rod or Pipe to Three Cable Clamp 27

Rod or Pipe to Two Cable Clamp 27

Rod to Cable Clamp 25, 26

Rod to Cable Lug Clamp 25

Rod to Tape Clamp 25

Roof Holders 73

Round and Tape Connector 64

Index

Round Saddle 51

Screw Down Test Clamp 60

Self - Standing Lightning Pole (Hot Dip Galvanized) 70

Shear Bolt Connector 62

Signal Reference Ground Grid 21

Solvent Cleaning 67

Spike 17

Split Bolt 61

Square Tape Clamp 64

Square Tape Support 57

Static Earth Receptacle 31

Static Earth Reels 44

Static Earth Reels with Monitor and Remote Interlock Controlled 45

Stranded Copper Conductor 82

Strike Pad 50

Tape Clamp 30

Tape Clip 58

Tape Clip with Adhesive Base 66

Tape Conductors 76-78

Tape Lug Connector 64

Tape Saddle 51

Tape Support 57

Tape Support (LPS) 63

Tape Test Connector 58

Tee Clamp 56

Terminal Lug 61

Tip 15

U-Bolt Rod Clamp 28

Universal Connector 62

Wall Saddle 54

Z-Connector 63

WORLD CLASS QUALITY

Kumwell Corporation Public Company Limited
100/3 THESABANSONGKROW RD., LARDYAO, CHATUCHAK, BANGKOK 10900
TEL : +66(0) 2954-3455 FAX : +66(0) 2591-7891
E-mail : info@kumwell.com
www.kumwell.com